smiths interconnect

L Series

Rugged High Density Modular Connectors
Standard and EN45545 Certified Versions

Original Hypertac®

Hyperboloid Contact Technology

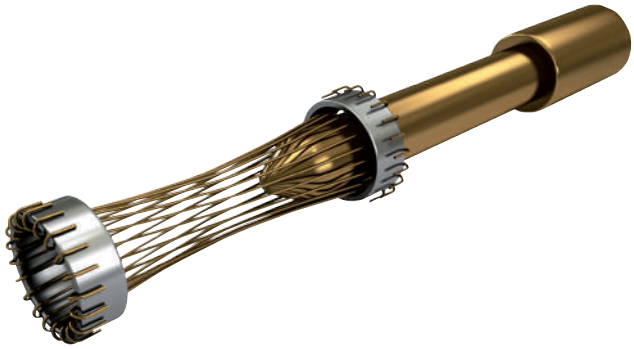

Hypertac (HYPERboloid conTACt) is the original superior performing hyperboloid contact technology designed for use in all applications and in harsh and demanding environments where high reliability and safety are critical.

The shape of the contact sleeve is formed by hyperbolically arranged contact wires, which align themselves elastically as contact lines around the pin, providing a number of linear contact paths. This construction allows a very tight control of the spring forces and consequently of the insertion and withdrawal forces.

The inherent electrical and mechanical characteristics of the Hypertac hyperboloid contact ensure unrivaled performance in terms of reliability, number of mating cycles, low contact force and minimal contact resistance.

Hypertac hyperboloid contact provides the following commercial benefits:

Low cost of ownership
Does not need replacement during equipment life

Reduced system costs
Equipment design is less critical

Reduced qualification costs
No re-testing due to contact failures

Unrivaled Performance

100,000
Number of Mating Cycles

Shock and
Vibration Immunity

Low
Insertion and Extraction Force

Low
Contact Resistance

High
Current Ratings

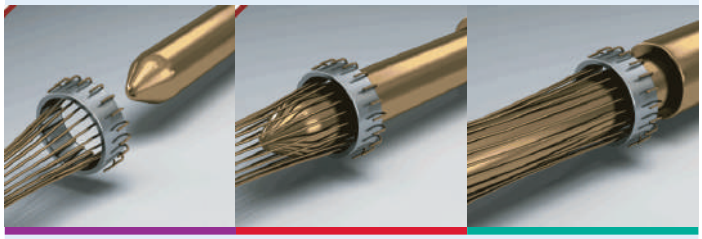

Wire sleeve before insertion of pin | Pin partially inserted into sleeve | Pin completely inserted into sleeve

Content

L Series Connectors 2
L Modular Series 3
Technical Characteristics 4
How to Order 5

Frames

Frame A 6
Frame B 7
Frame BVL 8
Frame BVS 9
Frame H 10
Frame MVL1A 11
Frame MVS1A 12
Frame MVL2A 13
Frame MVS2A 14
Frame MVS2S 15
Frame MY1A 16
Frame MY2A 17

Modules

Modules A and RA 18
Modules B and RB 19
Modules C and RC 20
Modules D and RD 21
Modules E and RE 22
Module F 23
Module G 24
Modules H and RH 25
Module K 26
Module K4 27
Modules M and RM 28
Module N 29
Module PN 30
Modules Q and RQ 31
Module R 32
Module RR 33
Module RR1 34
Module S 35
Module RS 36
Module T and RT 37
Module U 38
Module RU 39
Module V (Coax) 40
Module V (Power) 41
Module W 42
Modules Z1 and RZ1 43
Module Cat 5e 44
Module Cat 6A 45
Module Accessories 46

Mounting Dimensions

Panel cut-out 47

L Series Connectors

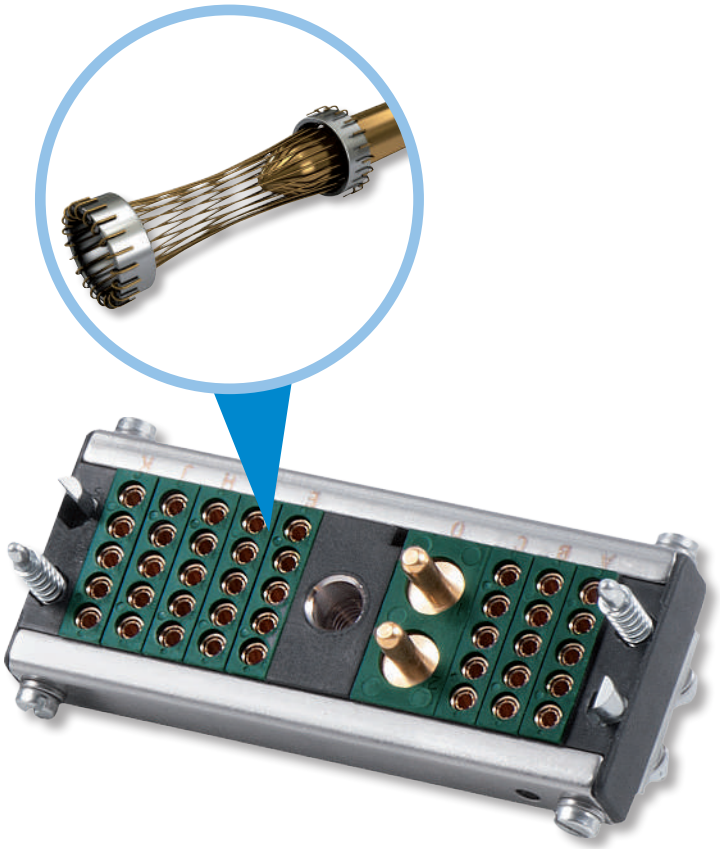

Features and Benefits

- **Variety of combination in a single connector frame**
- **Low insertion and extraction forces**
- **Full range of accessories**
- **Modules' temperature range from –55 °C to 125 °C**
- **Materials RoHS and REACH compliant**
- **Configurations compliant to EN45545 and UL E102195**
- **High density interconnect systems**
- **Reliability in harsh environments**
  - Immune to shock and vibration
  - Long contact life
  - Minimal contact resistance
  - Efficient power consumption
- **High current ratings**
- **Low cost of ownership**
- **Design flexibility**
  - Metal back shells / plastic hoods
  - Building block system composed of custom module combinations within a connector frame
  - Signal, power and coaxial contact types available
  - Fixed and snap-in contact versions
  - Jackscrews available for half-turn quick disconnect
  - Float mounting for blind mate
- **Cable to chassis and rack and panel applications**
- **Standard communication protocols for Cat5e and Cat6A modules**: Ethernet and USB 2.0

L connectors are modular rugged connectors that include coax and high current contacts up to 200 A. The L series is used in high demanding of applications where the environment requires durability, ruggedization and extended operating life and employs a do-it-yourself system based on the building block principle.

They offer a wide variety of combinations available in standard and compliant to EN45545 requirements versions. Thus, the user is capable of selecting the connector that fulfills the exact requirements with off-the-shelf components.

One of the many advantages of the Hypertac hyperboloid contact used is its low extraction and insertion forces. In this application it enables the user to assemble large numbers of contacts into a connector which is still able to mate and unmate smoothly and easily.

L Modular Series

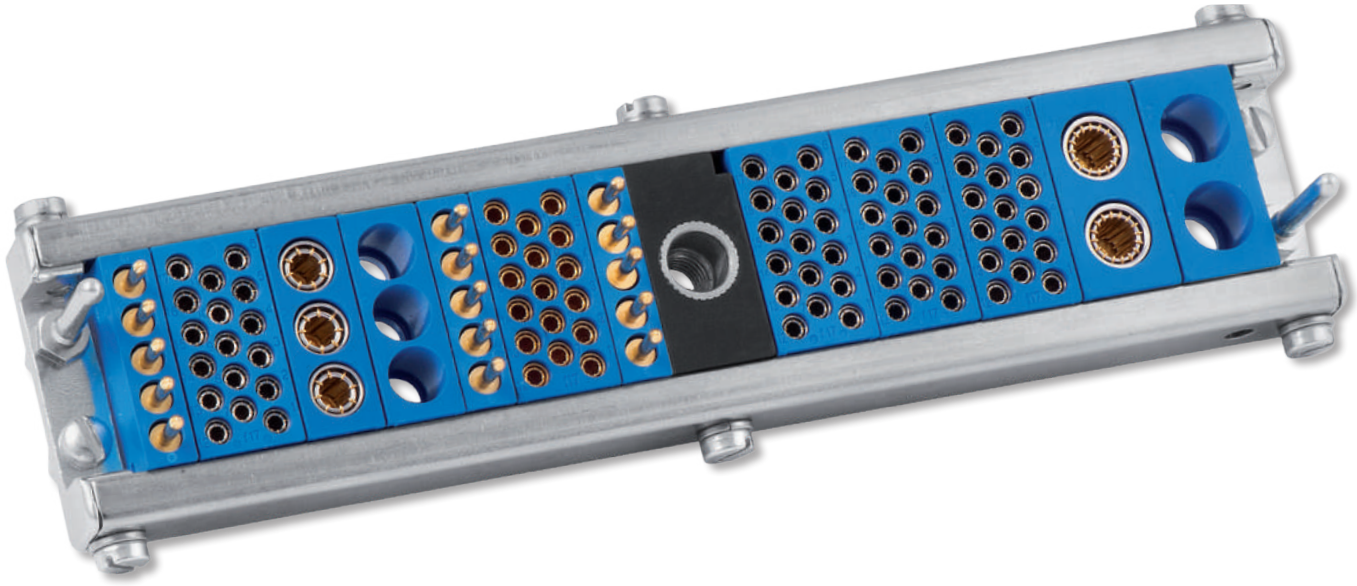

Modular to customize – Mix between signal, power, coaxial, fiber optic, Cat5e, Cat6A and pneumatic modules

Premium Hypertac Hyperboloid contact technology

Broad variety of frames: floating, blind mating for rack and panel, and secure panel mount with hoods

Wide range for current rating 1 to 200A

Minimal contact resistance efficient power consumption

Quick to engage and disengage for repetitive tests procedures

Up to 100,000 mating cycles

Hyperboloid contact technology provides lower contact resistance, reduces heat build-up; enabling to handle greater current and long connector life

Flexible and modular do-it-yourself assembly enables to change configurations while in operation

All the above means: easy to use, uncompromised performance with lowest lifecycle cost (TOTEX)!

Technical Characteristics

(1) Rating Voltage and DWV data are calculated following the NF EN 50124-1
(2) IR data are calculated following the NF F 61-030
(3) For more details ask factory
Ask factory

Module	Ways	HC Size	Current Rating	Contact Resistance	Contact Retention	Contact Retention System (into the insulator)	Mating/unmating forces (module)	Rating Voltage	DWV (1)	Insulation resistance (2)	Weight	UNIT	Contact Life Cycle	Temperature Rating	Insulation Material (Polymer)
	#	mm	A	mΩ (<)	N		N (<)	V	V RMS	MΩ @500 VDC	g (<)	#	Mating #	°C	Type
A	5	1.50	8	2.5	70	Fixed	7.5	250	2500	>=5000	10.1	1	100k	−55 to 125	DAP
RA								160	2500	>=4000	10.1	1			TS EN45545
B	3	2.50	15	1.0			21.0	200	2500	>=5000	17.9	1.5			DAP
RB				1.0				160	2500	>=4000	17.9	1.5			TS EN45545
C	2	3.50	25	0.8			18.0	320	3500	>=5000	21.5	2			DAP
RC				0.8				250	3500	>=5000	21.5	2			TS EN45545
D	17	1.20	8	2.5			30.0	200	2500	>=5000	23.9	2			DAP
RD								160	2500	>=4000	23.9	2			TS EN45545
E	9	1.50					15.0	250	3000	>=5000	24.2	1.5			DAP
RE								200	3000	>=4000	24.2	1.5			TS EN45545
F (FO+COAX)	2+1	FO +coax	—	—	-	Snap-in	—	NA	NA	NA	7.6	1.5	—	—	PEI
F (FO+Power)		FO +2.5	—	—	-		—	NA	NA	NA	7.1	1.5	—	—	PEI
G	1	6.00	200	0.2	70		45.0	400	5000	>=5000	107	3.5	100k	−55 to 125	PPS
H	2	Coax	—	—	—		10.0	-	-	-	11.1	2	—	—	DAP
RH			—	—	—		10.0	-	-	-	11.1	2	—	—	TS EN45545
K	1	4.30	100	0.4	70		25.0	400	5000	>=5000	54	2.5	100k	−55 to 125	PPS
K4	4	4.30	100	0.4	(3)		120	250	3500	>=5000	35.9	6			PA
M	2	3.50	50	0.6	70	Fixed	23.0	320	3500	>=5000	22.5	2			DAP
RM								250	3500	>=4000	22.5	2			TS EN45545
N	4	2.00	15	1.5			10.0	400	5000	>=5000	30.3	4			PPS
PN	2	Air	—	—	NA	Snap-in	—	NA	NA	NA	14.9	2	—	—	PPS
Q	9	1.00	8	2.5	70	Fixed	15.0	200	2500	>=4000	11.4	1	100k	−55 to 125	DAP
RQ								160	2500	>=4000	11.4	1			TS EN45545
RR	5	1.50			40	Snap-in	7.5	32	1500	>=3000	13.2	1			PC EN45545
R	5	1.50	8	2,5	(3)		7,5	160	1500	>=4000	13.2	1			PA
RS	3	2.50	15	1.0	60		21.0	160	2500	>=4000	17.2	1.5			PC EN45545
RR1	5	1.50	8	2.5	40		7.5	80	1500	>=3000	13.5	1			
S	3	2.50	15	1.5	(3)		21.0	320	3000	>=5000	17.2	1.5			PA
T	5	1.50	8	2.5	50		7.5	320	3000	>=5000	12.3	1			DAP
RT								200	3000	>=5000	12.3	1			TS EN45545
U	2	3.50	25/50	0.8	(3)		23.0	630	3500	>=5000	20.6	2			PA
RU	2	3.50	25/50	0.8	60		23.0	250	3500	>=5000	20.6	2			PC EN45545
V (COAX)	3	Coax	—	—	(3)		—	NA	NA	NA	18.8	1.5	50k (min)	—	PA
V (Power)		2.30	25	1.5	(3)		21.0	250	1500	>=5000	18.8	1.5	100k	−55 to 125	PA
W	28	0.60	4	5.0	25		25.0	80	1500	>=3000	13.9	2			PPS
RZ1	2	3.50	25/50	0,8	60		23.0	400	3000	>=5000	29.6	2			PA
Z1								320							PA EN45545
CAT 5e	1	Cat 5e	-	-	NA		6	NA	NA	NA	57.1	4	100k		PC EN45545
CAT 6A		Cat 6A	-	-	NA		9	NA	NA	NA	59.8	4			

How to Order

L						
1	2	3	4	5	5	6

1	L Series [Fixed][1]	
2	Plug or Receptacle	P Plug E Receptacle
3	Frame Type	A Frame A B Frame B BVL Frame BVL BVS Frame BVS H Frame H MVL1A Frame MVL1A[3] plug only MVS1A Frame MVS1A[3] plug only MVL2A Frame MVL2A[3] plug only MVS2A Frame MVS2A[3] plug only MVS2S Frame MVS2S[3] plug only MY1A Frame MY1A[3] plug only MY2A Frame MY2A[3] plug only MVS Frame MVS receptacle only MVS Frame MVL receptacle only MY Frame MY receptacle only
4	Frame Length[2]	4 to 30 Units Frame length is computed by multiplying the module units by module quantity and totaling the results. Allow 2 additional units for frames with jackscrews (see BV, MV, and MY frames).
5	Module Quantity + Part Number	4 + AMST / 2 + CHT / Amount of same modules together within frame. (Drop "L" from the beginning of module part number. Drop "T, "TAH", "TT" or "TH" from the end of part number of modules equipped with contacts. See pages 18 thru 44 for all module part numbers). Example: 4AMST = 4 of the (L)AMST style modules. Separate each series of modules by "/". Modules will be positioned in frame according to sequence listed.
6	Plating	TAH 1.27 µm gold over nickel on socket wires, gold flash on termination (sockets only) TT 0.25 µm gold over nickel on sockets wires, gold flash on termination (sockets only) TH 1.27 µm gold over nickel (pins only) T 0.25 µm gold over nickel (pins only)

Notes

1. If part number exceeds 24 characters, a special abbreviated part number will be assigned at the time of order.
2. If sum of the modules required is not whole unit widths, the use of the LFH1 half unit spacer must be used so that the total number of modules adds up to a whole unit number within the available frame length. If a L-series frame contains a center Jack Screw module, the total module width on either side of the center Jack Screw module must equal each other and may require the use of the LFH1 half unit spacer. Frames with more than 20 units may have a higher mating and unmating force.
3. For these frame types a coding system is available. Ask factory if multiple coding systems are required.

   G, K, Cat5e and Cat6A modules are not available for these types of frame. Cat5e and Cat6A Low Profile version modules can be selected for frame MVS2S only. Frames MV and MY available in some unit lengths only; see specific pages.

Frames

Dimensions and Specifications

Frame A

Rack and Panel

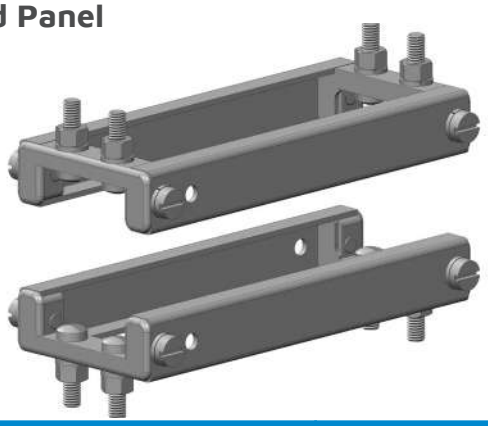

Units	X	Plug		Receptacle	
		Code	Weight	Code	Weight
4	28.5 [1.122]	LPA4	31.3 [1.10]	LEA4	31.3 [1.10]
5	34.0 [1.339]	LPA5	32.9 [1.16]	LEA5	32.9 [1.16]
6	39.5 [1.555]	LPA6	34.6 [1.22]	LEA6	34.6 [1.22]
7	45.0 [1.772]	LPA7	36.2 [1.28]	LEA7	36.2 [1.28]
8	50.5 [1.988]	LPA8	37.9 [1.34]	LEA8	37.9 [1.34]
9	56.0 [2.205]	LPA9	39.5 [1.39]	LEA9	39.5 [1.39]
10	61.5 [2.421]	LPA10	41.2 [1.45]	LEA10	41.2 [1.45]
11	67.0 [2.638]	LPA11	42.8 [1.51]	LEA11	42.8 [1.51]
12	72.5 [2.854]	LPA12	44.5 [1.57]	LEA12	44.5 [1.57]
13	78.0 [3.071]	LPA13	46.1 [1.63]	LEA13	46.1 [1.63]
14	83.5 [3.287]	LPA14	47.8 [1.69]	LEA14	47.8 [1.69]
15	89.0 [3.504]	LPA15	49.5 [1.74]	LEA15	49.5 [1.74]
16	94.5 [3.72]	LPA16	51.1 [1.80]	LEA16	51.1 [1.80]
17	100.0 [3.937]	LPA17	52.8 [1.86]	LEA17	52.8 [1.86]
18	105.5 [4.154]	LPA18	54.4 [1.92]	LEA18	54.4 [1.92]
19	111.0 [4.37]	LPA19	56.1 [1.98]	LEA19	56.1 [1.98]
20	116.5 [4.587]	LPA20	57.7 [2.04]	LEA20	57.7 [2.04]
21	122.0 [4.803]	LPA21	59.4 [2.09]	LEA21	59.4 [2.09]
22	127.5 [5.02]	LPA22	61.0 [2.15]	LEA22	61.0 [2.15]
23	133.0 [5.236]	LPA23	62.7 [2.21]	LEA23	62.7 [2.21]
24	138.5 [5.453]	LPA24	64.3 [2.27]	LEA24	64.3 [2.27]
25	144.0 [5.669]	LPA25	66.0 [2.33]	LEA25	66.0 [2.33]
26	149.5 [5.886]	LPA26	67.6 [2.39]	LEA26	67.6 [2.39]
27	155.0 [6.102]	LPA27	69.3 [2.44]	LEA27	69.3 [2.44]
28	160.5 [6.319]	LPA28	70.9 [2.50]	LEA28	70.9 [2.50]
29	166.0 [6.535]	LPA29	72.6 [2.56]	LEA29	72.6 [2.56]
30	171.5 [6.752]	LPA30	74.2 [2.62]	LEA30	74.2 [2.62]

LPA Plug

Module sequence

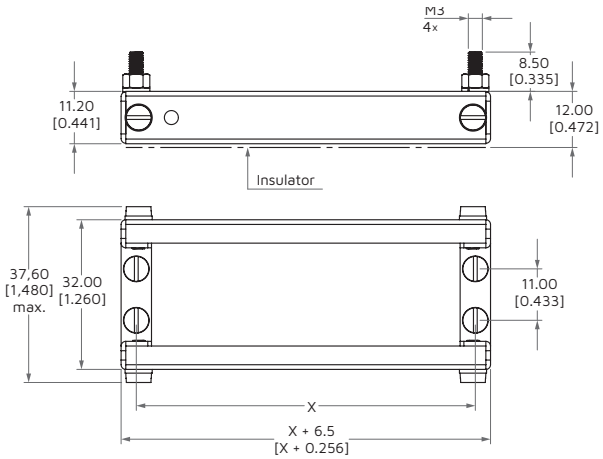

LEA Receptacle

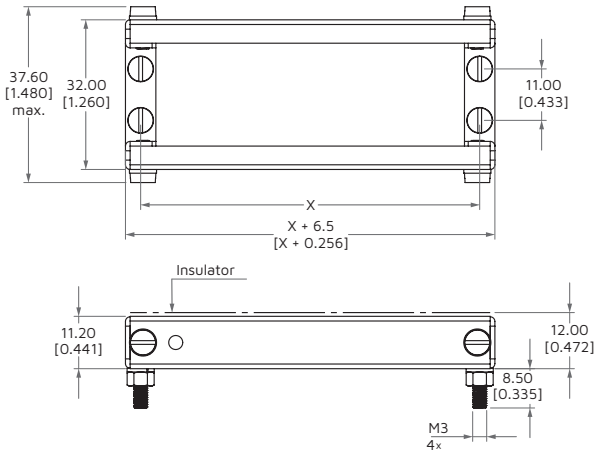

Projection

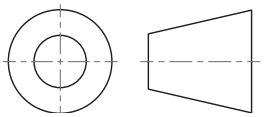

Dimensions are in mm [inches], weight is in g [ounces].

Frame B

Rack and Panel with Guides

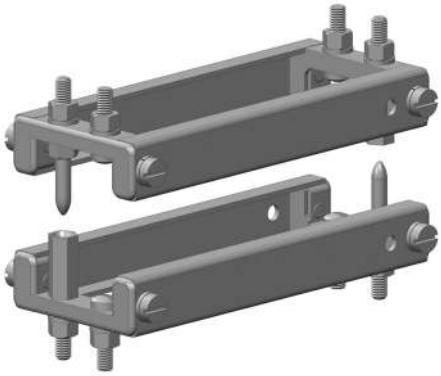

Units	X	Plug		Receptacle	
		Code	Weight	Code	Weight
4	28.5 [1.122]	LPB4	33.2 [1.17]	LEB4	33.2 [1.17]
5	34.0 [1.339]	LPA5	34.8 [1.23]	LEB5	34.8 [1.23]
6	39.5 [1.555]	LPA6	36.5 [1.29]	LEB6	36.5 [1.29]
7	45.0 [1.772]	LPA7	38.1 [1.34]	LEB7	38.1 [1.34]
8	50.5 [1.988]	LPA8	39.8 [1.40]	LEB8	39.8 [1.40]
9	56.0 [2.205]	LPA9	41.4 [1.46]	LEB9	41.4 [1.46]
10	61.5 [2.421]	LPA10	43.1 [1.52]	LEB10	43.1 [1.52]
11	67.0 [2.638]	LPA11	44.7 [1.58]	LEB11	44.7 [1.58]
12	72.5 [2.854]	LPA12	46.4 [1.64]	LEB12	46.4 [1.64]
13	78.0 [3.071]	LPA13	48.0 [1.69]	LEB13	48.0 [1.69]
14	83.5 [3.287]	LPA14	49.7 [1.75]	LEB14	49.7 [1.75]
15	89.0 [3.504]	LPA15	51.3 [1.81]	LEB15	51.3 [1.81]
16	94.5 [3.72]	LPA16	53.0 [1.87]	LEB16	53.0 [1.87]
17	100.0 [3.937]	LPA17	54.7 [1.93]	LEB17	54.7 [1.93]
18	105.5 [4.154]	LPA18	56.3 [1.99]	LEB18	56.3 [1.99]
19	111.0 [4.37]	LPA19	58.0 [2.04]	LEB19	58.0 [2.04]
20	116.5 [4.587]	LPA20	59.6 [2.10]	LEB20	59.6 [2.10]
21	122.0 [4.803]	LPA21	61.3 [2.16]	LEB21	61.3 [2.16]
22	127.5 [5.02]	LPA22	62.9 [2.22]	LEB22	62.9 [2.22]
23	133.0 [5.236]	LPA23	64.6 [2.28]	LEB23	64.6 [2.28]
24	138.5 [5.453]	LPA24	66.2 [2.34]	LEB24	66.2 [2.34]
25	144.0 [5.669]	LPA25	67.9 [2.39]	LEB25	67.9 [2.39]
26	149.5 [5.886]	LPA26	69.5 [2.45]	LEB26	69.5 [2.45]
27	155.0 [6.102]	LPA27	71.2 [2.51]	LEB27	71.2 [2.51]
28	160.5 [6.319]	LPA28	72.8 [2.57]	LEB28	72.8 [2.57]
29	166.0 [6.535]	LPA29	74.5 [2.63]	LEB29	74.5 [2.63]
30	171.5 [6.752]	LPA30	76.1 [2.69]	LEB30	76.1 [2.69]

Dimensions are in mm [inches], weight is in g [ounces].

LPB Plug

Module sequence

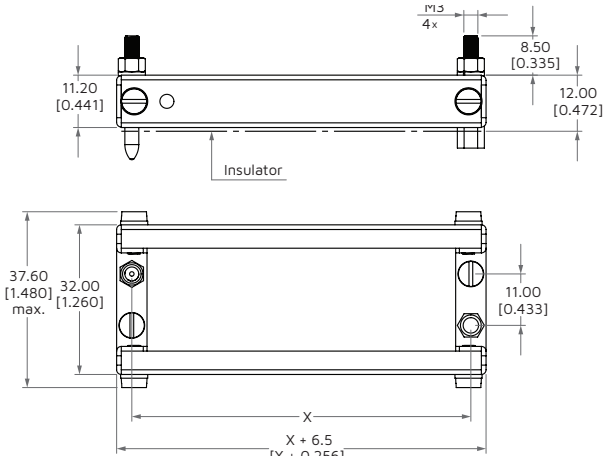

LEB Receptacle

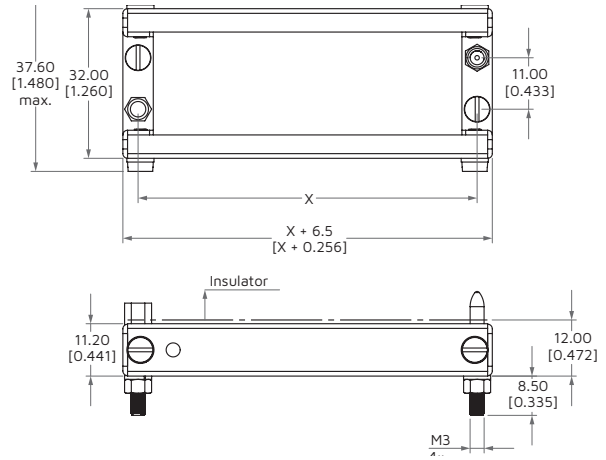

Projection

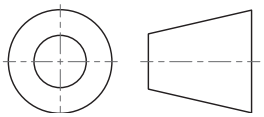

Frame BVL

Rack and Panel with Guides and Long Jackscrew

Units	X	Plug		Receptacle	
		Code	Weight	Code	Weight
4	28.5 [1.122]	LPBVL4	64.2 [2.27]	LEBVL4	44.6 [1.57]
5	34.0 [1.339]	LPBVL5	65.9 [2.32]	LEBVL5	46.2 [1.63]
6	39.5 [1.555]	LPBVL6	67.5 [2.38]	LEBVL6	47.9 [1.69]
7	45.0 [1.772]	LPBVL7	69.2 [2.44]	LEBVL7	49.5 [1.75]
8	50.5 [1.988]	LPBVL8	70.8 [2.5]	LEBVL8	51.2 [1.81]
9	56.0 [2.205]	LPBVL9	72.5 [2.56]	LEBVL9	52.8 [1.86]
10	61.5 [2.421]	LPBVL10	74.1 [2.62]	LEBVL10	54.5 [1.92]
11	67.0 [2.638]	LPBVL11	75.8 [2.67]	LEBVL11	56.1 [1.98]
12	72.5 [2.854]	LPBVL12	77.4 [2.73]	LEBVL12	57.8 [2.04]
13	78.0 [3.071]	LPBVL13	79.1 [2.79]	LEBVL13	59.4 [2.10]
14	83.5 [3.287]	LPBVL14	80.8 [2.85]	LEBVL14	61.1 [2.15]
15	89.0 [3.504]	LPBVL15	82.4 [2.91]	LEBVL15	62.7 [2.21]
16	94.5 [3.72]	LPBVL16	84.1 [2.97]	LEBVL16	64.4 [2.27]
17	100.0 [3.937]	LPBVL17	85.7 [3.02]	LEBVL17	66.0 [2.33]
18	105.5 [4.154]	LPBVL18	87.4 [3.08]	LEBVL18	67.7 [2.39]
19	111.0 [4.37]	LPBVL19	89.0 [3.14]	LEBVL19	69.4 [2.45]
20	116.5 [4.587]	LPBVL20	90.7 [3.2]	LEBVL20	71.0 [2.50]
21	122.0 [4.803]	LPBVL21	92.3 [3.26]	LEBVL21	72.7 [2.56]
22	127.5 [5.02]	LPBVL22	94.0 [3.31]	LEBVL22	74.3 [2.62]
23	133.0 [5.236]	LPBVL23	95.6 [3.37]	LEBVL23	76.0 [2.68]
24	138.5 [5.453]	LPBVL24	97.3 [3.43]	LEBVL24	77.6 [2.74]
25	144.0 [5.669]	LPBVL25	98.9 [3.49]	LEBVL25	79.3 [2.80]
26	149.5 [5.886]	LPBVL26	100.6 [3.55]	LEBVL26	80.9 [2.85]
27	155.0 [6.102]	LPBVL27	102.2 [3.61]	LEBVL27	82.6 [2.91]
28	160.5 [6.319]	LPBVL28	103.9 [3.66]	LEBVL28	84.2 [2.97]
29	166.0 [6.535]	LPBVL29	105.5 [3.72]	LEBVL29	85.9 [3.03]
30	171.5 [6.752]	LPBVL30	107.2 [3.78]	LEBVL30	87.5 [3.09]

LPBVL Plug

Module sequence

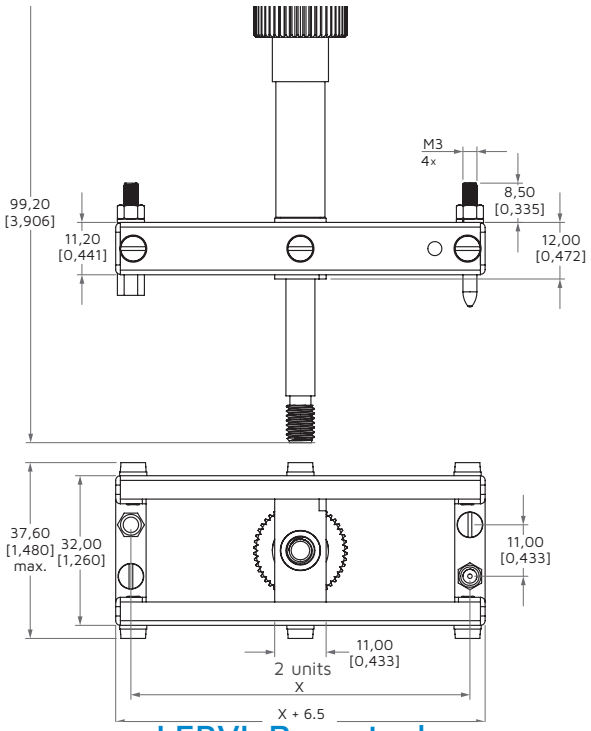

LEBVL Receptacle

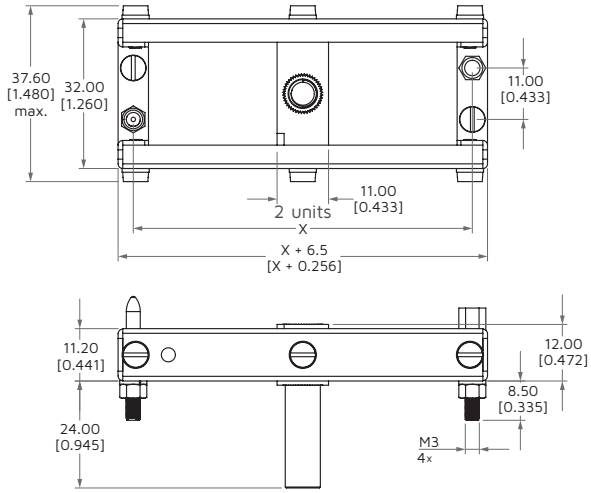

Projection

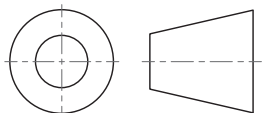

Dimensions are in mm [inches], weight is in g [ounces].

Frame BVS

Rack and Panel with Guides and Short Jackscrew

Units	X	Plug		Receptacle	
		Code	Weight	Code	Weight
4	28.5 [1.122]	LPBVS4	58.9 [2.08]	LEBVS4	42.2 [1.49]
5	34.0 [1.339]	LPBVS5	60.5 [2.13]	LEBVS5	43.8 [1.55]
6	39.5 [1.555]	LPBVS6	62.2 [2.19]	LEBVS6	45.5 [1.60]
7	45.0 [1.772]	LPBVS7	63.8 [2.25]	LEBVS7	47.1 [1.66]
8	50.5 [1.988]	LPBVS8	65.5 [2.31]	LEBVS8	48.8 [1.72]
9	56.0 [2.205]	LPBVS9	67.1 [2.37]	LEBVS9	50.4 [1.78]
10	61.5 [2.421]	LPBVS10	68.8 [2.43]	LEBVS10	52.1 [1.84]
11	67.0 [2.638]	LPBVS11	70.4 [2.48]	LEBVS11	53.7 [1.90]
12	72.5 [2.854]	LPBVS12	72.1 [2.54]	LEBVS12	55.4 [1.95]
13	78.0 [3.071]	LPBVS13	73.7 [2.6]	LEBVS13	57.0 [2.01]
14	83.5 [3.287]	LPBVS14	75.4 [2.66]	LEBVS14	58.7 [2.07]
15	89.0 [3.504]	LPBVS15	77.0 [2.72]	LEBVS15	60.3 [2.13]
16	94.5 [3.72]	LPBVS16	78.7 [2.78]	LEBVS16	62.0 [2.19]
17	100.0 [3.937]	LPBVS17	80.3 [2.83]	LEBVS17	63.6 [2.25]
18	105.5 [4.154]	LPBVS18	82.0 [2.89]	LEBVS18	65.3 [2.30]
19	111.0 [4.37]	LPBVS19	83.6 [2.95]	LEBVS19	67.0 [2.36]
20	116.5 [4.587]	LPBVS20	85.3 [3.01]	LEBVS20	68.6 [2.42]
21	122.0 [4.803]	LPBVS21	87.0 [3.07]	LEBVS21	70.3 [2.48]
22	127.5 [5.02]	LPBVS22	88.6 [3.13]	LEBVS22	71.9 [2.54]
23	133.0 [5.236]	LPBVS23	90.3 [3.18]	LEBVS23	73.6 [2.59]
24	138.5 [5.453]	LPBVS24	91.9 [3.24]	LEBVS24	75.2 [2.65]
25	144.0 [5.669]	LPBVS25	93.6 [3.3]	LEBVS25	76.9 [2.71]
26	149.5 [5.886]	LPBVS26	95.2 [3.36]	LEBVS26	78.5 [2.77]
27	155.0 [6.102]	LPBVS27	96.9 [3.42]	LEBVS27	80.2 [2.83]
28	160.5 [6.319]	LPBVS28	98.5 [3.48]	LEBVS28	81.8 [2.89]
29	166.0 [6.535]	LPBVS29	100.2 [3.53]	LEBVS29	83.5 [2.94]
30	171.5 [6.752]	LPBVS30	101.8 [3.59]	LEBVS30	85.1 [3.00]

Dimensions are in mm [inches], weight is in g [ounces].

LPBVS Plug

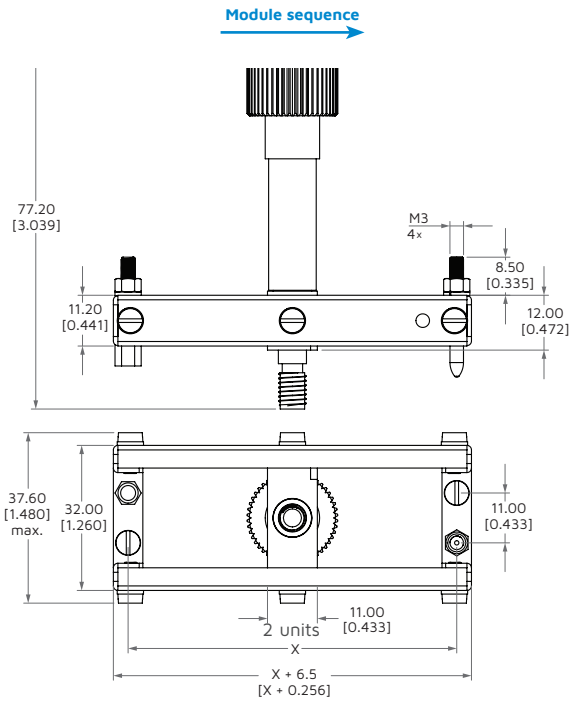

LEBVS Receptacle

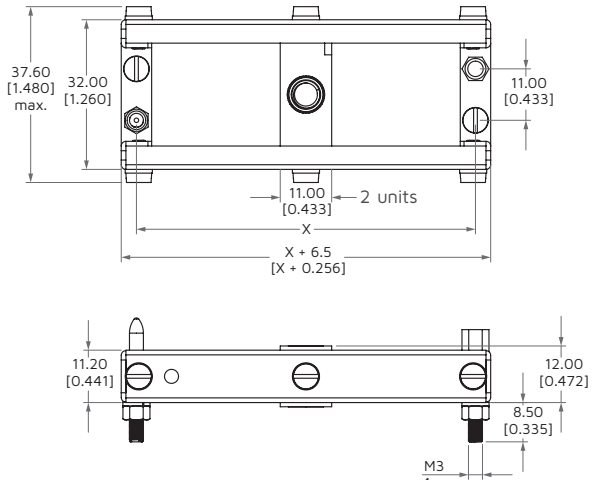

Projection

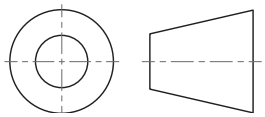

Frame H

Float Mount Rack and Panel with Guides

Float mounting 1.25 [0.049], 1 max. from center

File No.: UL E102195

Units	X	Plug		Receptacle	
		Code	Weight	Code	Weight
4	50.0 [1.969]	LPH4	53.7 [1.89]	LEH4	44.3 [1.56]
5	55.5 [2.185]	LPH5	55.4 [1.95]	LEH5	45.9 [1.62]
6	61.0 [2.402]	LPH6	57.0 [2.01]	LEH6	47.6 [1.68]
7	66.5 [2.618]	LPH7	58.7 [2.07]	LEH7	49.2 [1.74]
8	72.0 [2.835]	LPH8	60.3 [2.13]	LEH8	50.9 [1.80]
9	77.5 [3.051]	LPH9	62.0 [2.19]	LEH9	52.5 [1.85]
10	83.0 [3.268]	LPH10	63.6 [2.24]	LEH10	54.2 [1.91]
11	88.5 [3.484]	LPH11	65.3 [2.3]	LEH11	55.9 [1.97]
12	94.0 [3.701]	LPH12	66.9 [2.36]	LEH12	57.5 [2.03]
13	99.5 [3.917]	LPH13	68.6 [2.42]	LEH13	59.2 [2.09]
14	105.0 [4.134]	LPH14	70.2 [2.48]	LEH14	60.8 [2.15]
15	110.5 [4.35]	LPH15	71.9 [2.54]	LEH15	62.5 [2.20]
16	116.0 [4.567]	LPH16	73.5 [2.59]	LEH16	64.1 [2.26]
17	121.5 [4.783]	LPH17	75.2 [2.65]	LEH17	65.8 [2.32]
18	127.0 [5.00]	LPH18	76.9 [2.71]	LEH18	67.4 [2.38]
19	132.5 [5.217]	LPH19	78.5 [2.77]	LEH19	69.1 [2.44]
20	138.0 [5.433]	LPH20	80.2 [2.83]	LEH20	70.7 [2.49]
21	143.5 [5.65]	LPH21	81.8 [2.89]	LEH21	72.4 [2.55]
22	149.0 [5.866]	LPH22	83.5 [2.94]	LEH22	74.0 [2.61]
23	154.5 [6.083]	LPH23	85.1 [3.0]	LEH23	75.7 [2.67]
24	160.0 [6.299]	LPH24	86.8 [3.06]	LEH24	77.3 [2.73]
25	165.5 [6.516]	LPH25	88.4 [3.12]	LEH25	79.0 [2.79]
26	171.0 [6.732]	LPH26	90.1 [3.18]	LEH26	80.6 [2.84]
27	176.5 [6.949]	LPH27	91.7 [3.24]	LEH27	82.3 [2.90]
28	18.02 [7.165]	LPH28	93.4 [3.29]	LEH28	84.0 [2.96]
29	187.5 [7.382]	LPH29	95.0 [3.35]	LEH29	85.6 [3.02]
30	193.0 [7.598]	LPH30	96.7 [3.41]	LEH30	87.3 [3.08]

LPH Plug

Module sequence

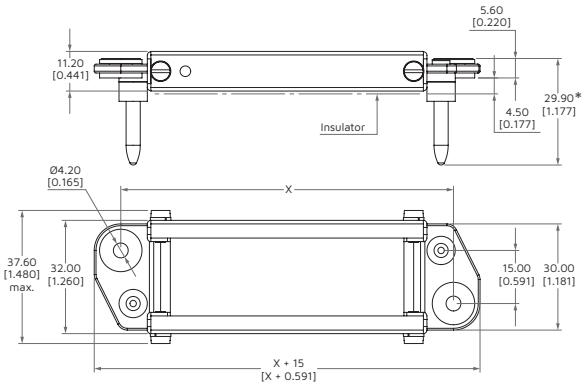

*When used with K or G modules the guiding pin's height is 46mm [1,811]

LEH Receptacle

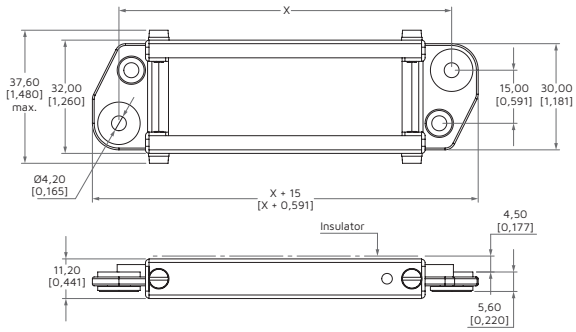

Projection

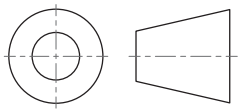

Dimensions are in mm [inches], weight is in g [ounces].

Frame MVL1A

Long Jackscrew with Plastic Backshells – one cable clamp at 45°

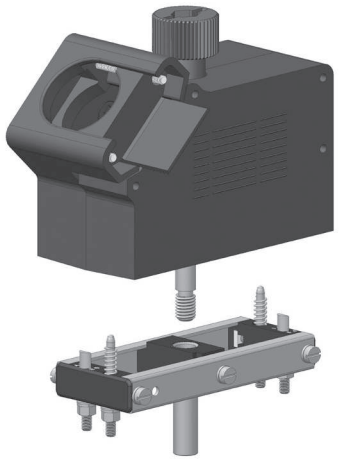

LPMVL1A Plug

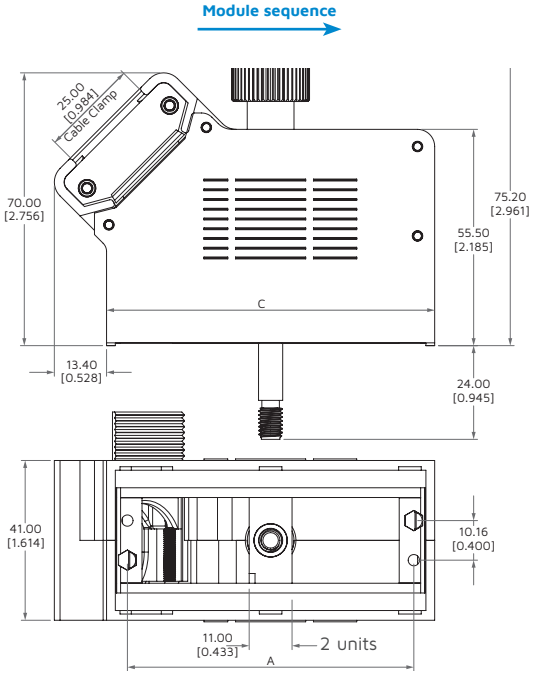

LEMVL Receptacle

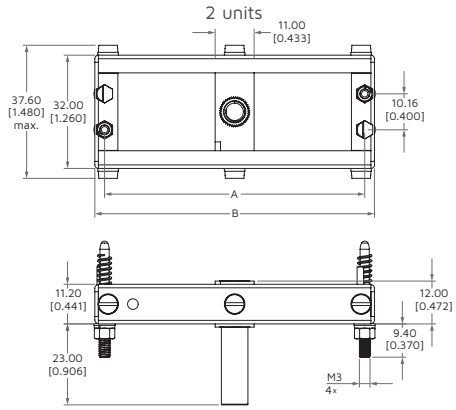

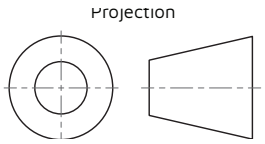

Units	A	B	C	Plug		Receptacle	
				Code	Weight	Code	Weight
12	73.5 [2.894]	79.0 [3.11]	84.2 [3.315]	LPMVL1A12	163.7 [5.77]	LEMVL12	51.6 [1.82]
15	90.0 [3.543]	95.5 [3.76]	100.7 [3.965]	LPMVL1A15	179.1 [6.32]	LEMVL15	56.5 [1.99]
20	117.5 [4.626]	123.0 [4.843]	128.2 [5.047]	LPMVL1A20	204.9 [7.23]	LEMVL20	64.8 [2.29]
22	128.5 [5.059]	134.0 [5.276]	139.2 [5.48]	LPMVL1A22	215.2 [7.59]	LEMVL22	68.1 [2.40]

Dimensions are in mm [inches], weight is in g [ounces].

Frame MVS1A

Short Jackscrew with Plastic Backshells – one cable clamp at 45°

LPMVS1A Plug

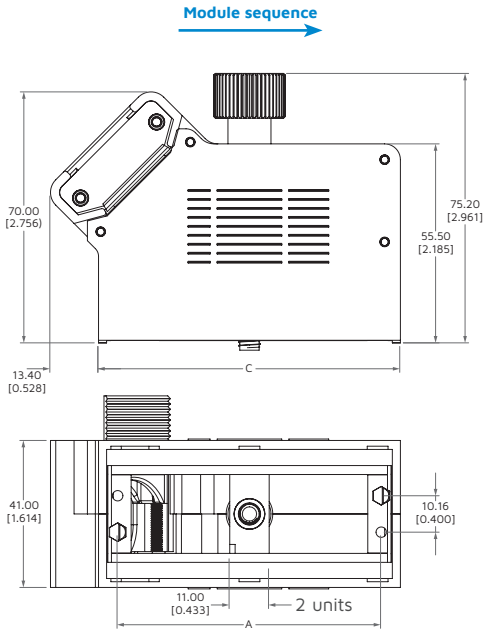

LEMVS Receptacle

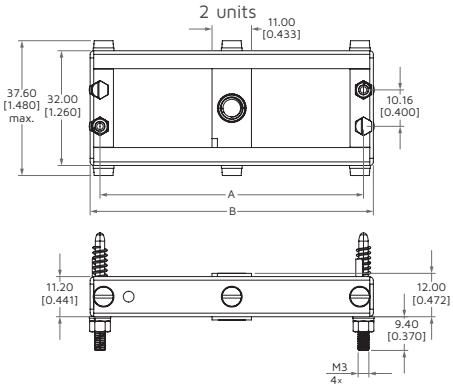

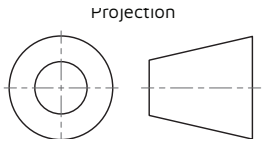

Units	A	B	C	Plug		Receptacle	
				Code	Weight	Code	Weight
12	73.5 [2.894]	79.0 [3.11]	84.2 [3.315]	LPMVS1A12	158.3 [5.58]	LEMVS12	49.2 [1.73]
15	90.0 [3.543]	95.5 [3.76]	100.7 [3.965]	LPMVS1A15	164.5 [5.8]	LEMVS15	54.1 [1.91]
20	117.5 [4.626]	123.0 [4.843]	128.2 [5.047]	LPMVS1A20	174.8 [6.17]	LEMVS20	62.4 [2.2]
22	128.5 [5.059]	134.0 [5.276]	139.2 [5.48]	LPMVS1A22	178.9 [6.31]	LEMVS22	65.7 [2.32]

Dimensions are in mm [inches], weight is in g [ounces].

Frame MVL2A

Long Jackscrew with Plastic Backshells – two cable clamps at 45°

LPMVL2A Plug

Module sequence

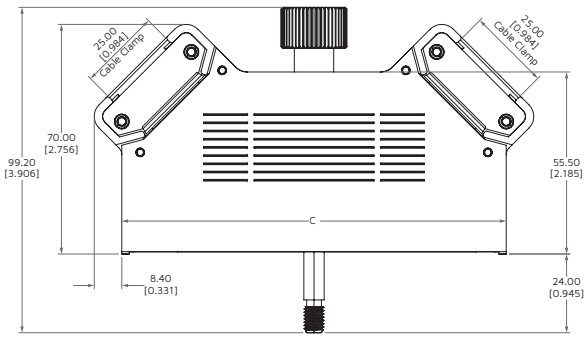

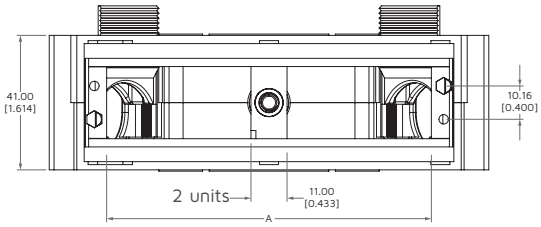

LEMVL Receptacle

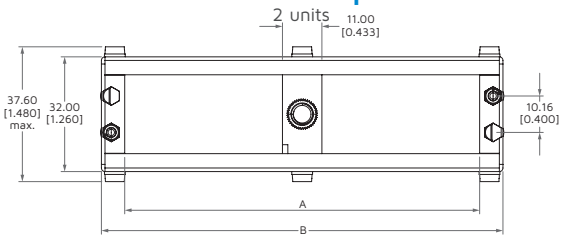

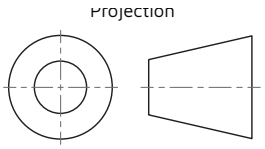

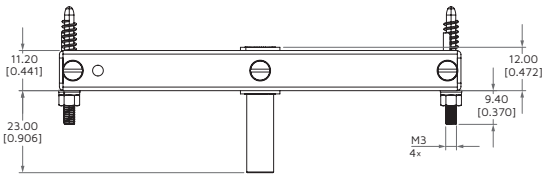

Units	A	B	C	Plug		Receptacle	
				Code	Weight	Code	Weight
18	106.5 [4.193]	112.0 [4.409]	117.4 [4.622]	LPMVL2A18	209.4 [7.39]	LEMVL18	61.5 [2.17]

Dimensions are in mm [inches], weight is in g [ounces].

Frame MVS2A

Short Jackscrew with Plastic Backshells – two cable clamps at 45°

LPMVS2A Plug

Module sequence

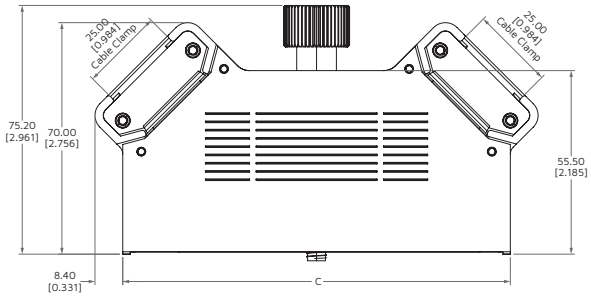

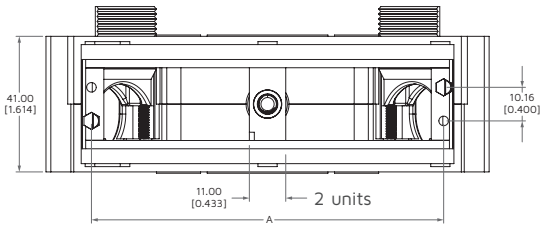

LEMVS Receptacle

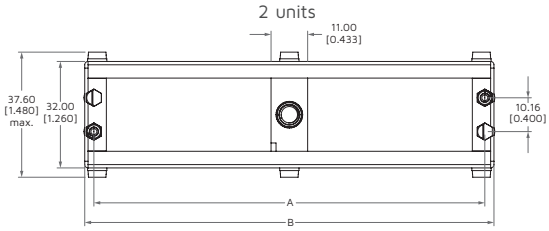

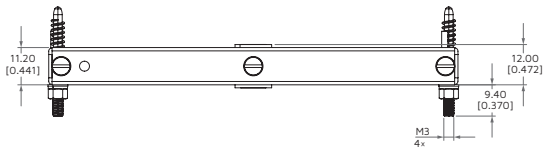

Projection

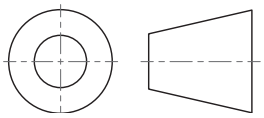

Units	A	B	C	Plug		Receptacle	
				Code	Weight	Code	Weight
18	106.5 [4.193]	112.0 [4.409]	117.4 [4.622]	LPMVS2A18	204 [7.2]	LEMVS18	59.1 [2.08]

Dimensions are in mm [inches], weight is in g [ounces].

Frame MVS2S

Short Jackscrew with Plastic Backshells – two cable clamps at 90°

LPMVS2S Plug

Module sequence

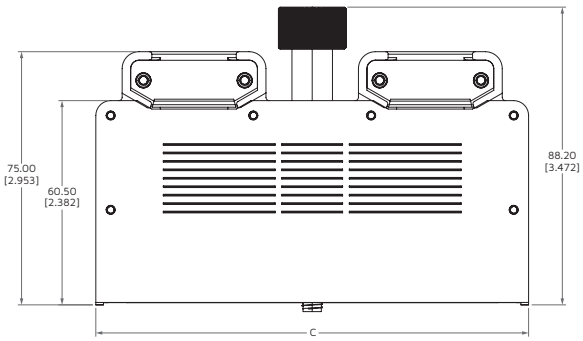

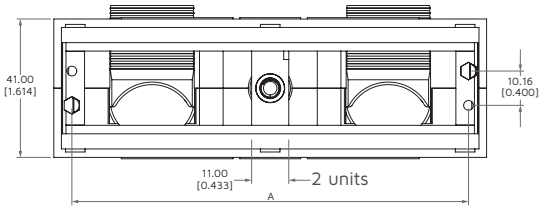

LEMVS Receptacle

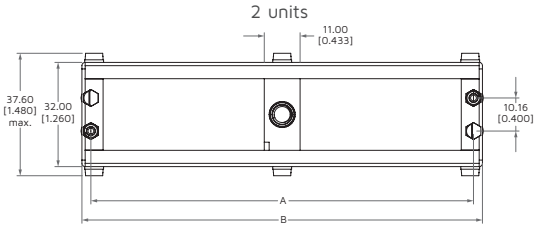

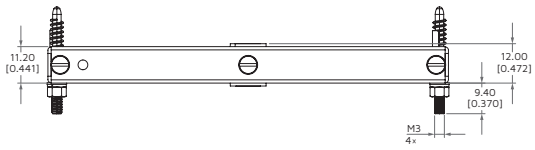

Projection

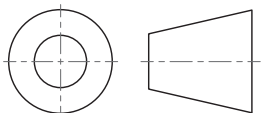

Units	A	B	C	Plug		Receptacle	
				Code	Weight	Code	Weight
18	106.5 [4.193]	112 [4.409]	117.2 [4.614]	LPMVS2S18	232.2 [8.19]	LEMVS18	58.2 [2.05]
20	117.5 [4.626]	123 [4.843]	128.2 [5.047]	LPMVS2S20	236.3 [8.34]	LEMVS20	61.5 [2.17]

Dimensions are in mm [inches], weight is in g [ounces].

Frame MY1A

Half-Turn Jackscrew with Plastic Backshells – one cable clamp at 45°

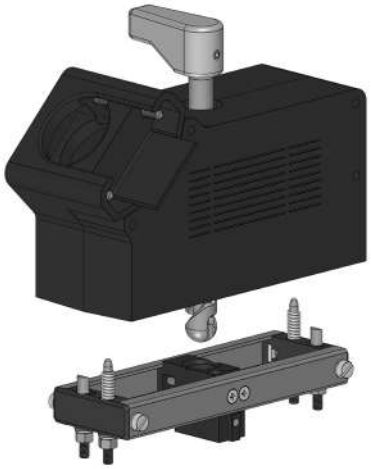

LPMY1A Plug

Module sequence

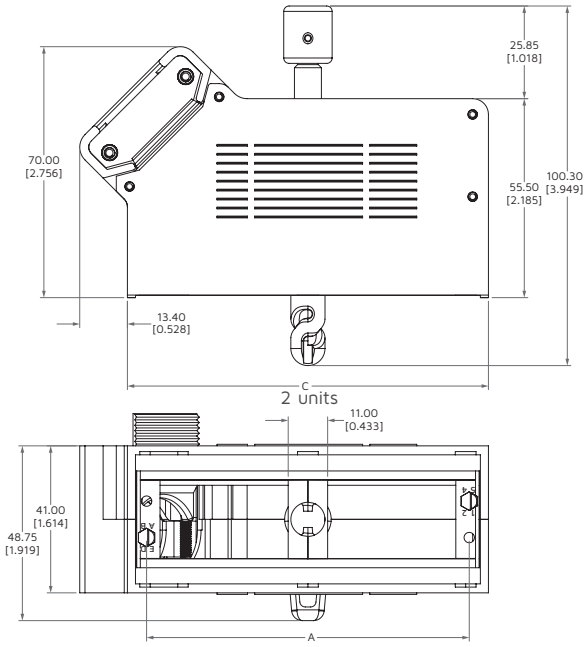

LEMVS Receptacle

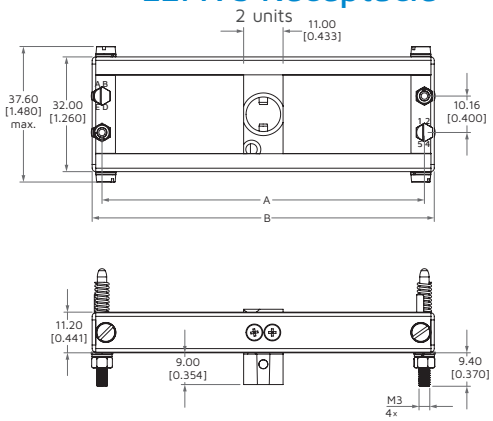

Projection

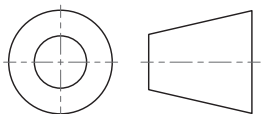

Units	A	B	C	Plug		Receptacle	
				Code	Weight	Code	Weight
12	73.5 [2.894]	79.0 [3.11]	84.2 [3.315]	LPMY1A12	208.3 [7.35]	LEMY12	52.5 [1.85]
15	90.0 [3.543]	95.5 [3.76]	100.7 [3.965]	LPMY1A15	214.5 [7.57]	LEMY15	57.4 [2.03]
20	117.5 [4.626]	123.0 [4.843]	128.2 [5.047]	LPMY1A20	224.8 [7.93]	LEMY20	65.7 [2.32]
22	128.5 [5.059]	134.0 [5.276]	139.2 [5.48]	LPMY1A22	228.9 [8.07]	LEMY22	69.0 [2.43]

Dimensions are in mm [inches], weight is in g [ounces].

Frame MY2A

Half-Turn Jackscrew with Plastic Backshells – two cable clamps at 45°

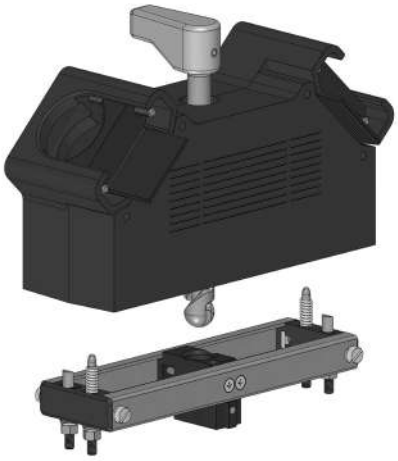

LPMY2A Plug

Module sequence

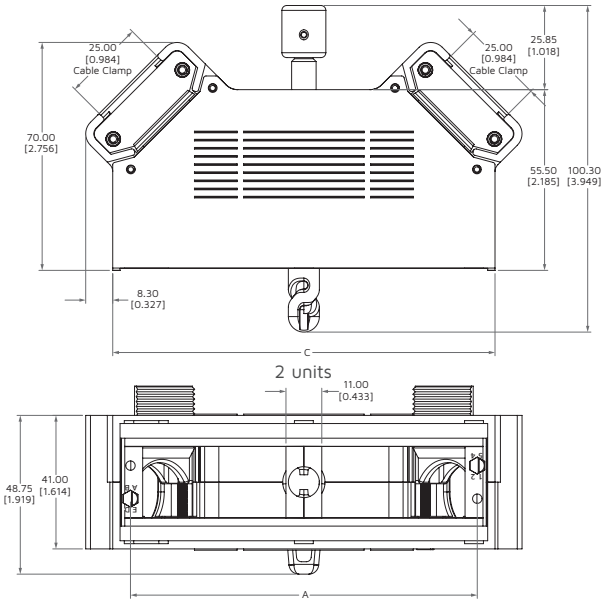

LEMY Receptacle

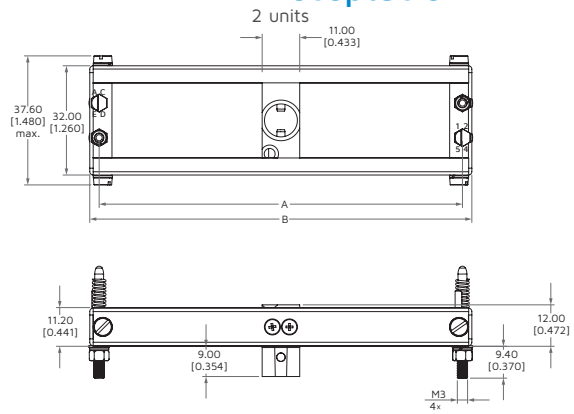

Projection

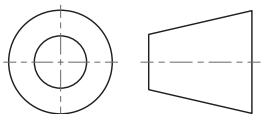

Units	A	B	C	Plug		Receptacle	
				Code	Weight	Code	Weight
18	106.5 [4.193]	112.0 [4.409]	117.4 [4.622]	LPMY2A18	231.9 [8.18]	LEMY18	61.4 [2.17]

Dimensions are in mm [inches], weight is in g [ounces].

Modules A and RA

8 A Contact Rating

1 unit, 5 Hypertac® hyperboloid fixed contacts, Ø1.50 [0.059]

Also mates with R crimp modules.

A

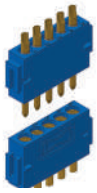

File No.: UL E102195

RA

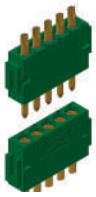

EN45545 fire and smoke compliant

Module	Gender	Termination	Contact Mating Surface Plating	Part Number
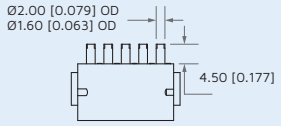	Female	Solder cup. Up to 16 AWG	1.27 µm gold	LAFSTAH
			0.25 µm gold	LRAFSTT
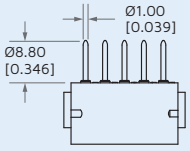	Female	Straight dip solder	1.27 µm gold	LAFDTAH
			0.25 µm gold	LRAFDTT
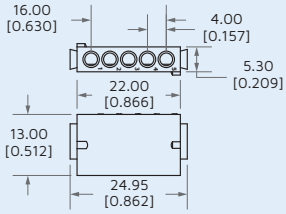	Empty block	—	—	LAHT (ZLM005-001)
				LRAHT (Ref. 25666)
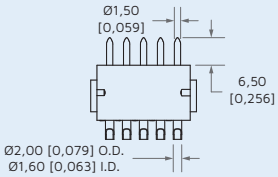	Male	Solder cup. Up to 16 AWG	1.27 µm gold	LAMSTH
			0.25 µm gold	LAMST
				LRAMST
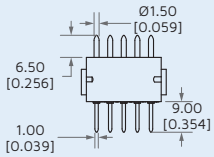	Male	Straight dip solder	1.27 µm gold	LAMDTH
			0.25 µm gold	LAMDT
				LRAMDT

Dimensions are in mm [inches].

Modules B and RB

15 A Contact Rating

1.5 units, 3 Hypertac® hyperboloid fixed contacts, Ø2.50 [0.098].

Also mates with S crimp modules.

B

File No.: UL E102195

RB

EN45545 fire and smoke compliant

Module	Gender	Termination	Contact Mating Surface Plating	Part Number
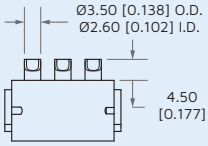	Female	Solder Cup Up to 12 AWG	1.27 µm gold	LBFSTAH
			0.25 µm	LRBFSTT
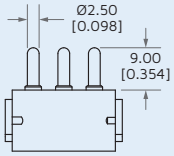	Female	Straight Dip Solder	1.27 µm gold	LBFDTAH
			0.25 µm	LRBFDTT
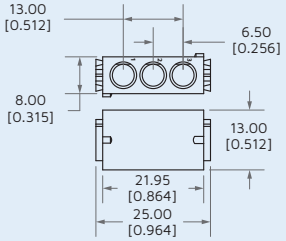	Empty Block	—	—	LBHT (ZLM003-001)
				LRBHT (Ref. 25667)
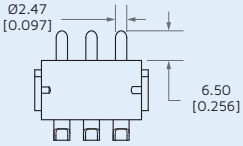	Male	Solder Cup Up to 16 AWG	1.27 µm gold	LBMSTH*
			0.25 µm gold	LBMST
				LRBMST
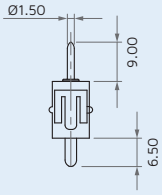		Straight dip solder	1.27 µm gold	LBMDTH
			0.25 µm gold	LBMDT
				LRBMDT

*First mate-last break module available with code LBMSTH-001

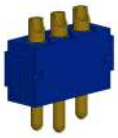

Dimensions are in mm [inches].

Modules C and RC

25 A Contact Rating

2 units, 2 Hypertac® hyperboloid fixed contacts, Ø3.50 [0.138]

Also mates with U crimp modules.

C

File No.: UL E102195

RC

EN45545 fire and smoke compliant

Module	Gender	Termination	Contact Mating Surface Plating	Part Number
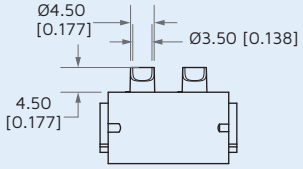	Female	Solder Cup Up to 10 AWG	1.27 µm gold	LCFSTAH
			0.25 µm	LRCFSTT
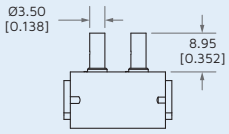	Female	Straight Dip Solder	1.27 µm gold	LCFDTAH
			0.25 µm	LRCFDTT
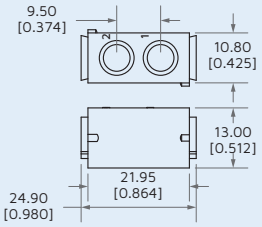	Empty Block	—	—	LCHT (ZLM002-001)
				LRCHT (Ref. 25668)
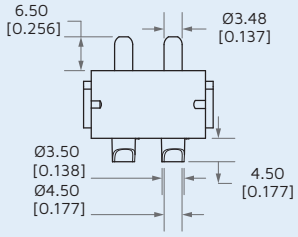	Male	Solder Cup Up to 10 AWG	1.27 µm gold	LCMSTH
			0.25 µm gold	LCMST
				LRCMST
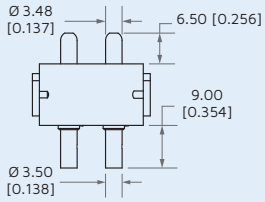	Male	Straight Dip Solder	1.27 µm gold	LCMDTH
			0.25 µm gold	LCMDT
				LRCMDT

Dimensions are in mm [inches].

Modules D and RD

8 A Contact Rating

2 units, 17 Hypertac® hyperboloid fixed contacts, Ø1.20 [0.147]

D

File No.: UL E102195

RD

EN45545 fire and smoke compliant

Module	Gender	Termination	Contact Mating Surface Plating	Part Number
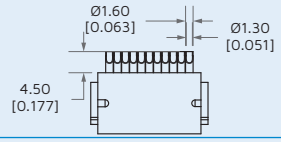	Female	Solder Cup Up to 20 AWG	1.27 µm gold	LDFSTAH
			0.25 µm	LRDFSTT
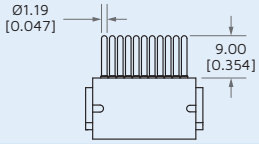	Female	Straight Dip Solder	1.27 µm gold	LDFDTAH
			0.25 µm	LRDFDTT
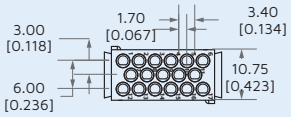	Empty Female Block	–	–	LDFHT (ZLM017-002)
				LRDFHT (Ref. 25670)
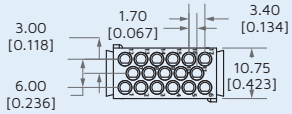	Empty Male Block	–	–	LDMHT (ZLM017-001)
				LRDMHT (Ref. 25669)
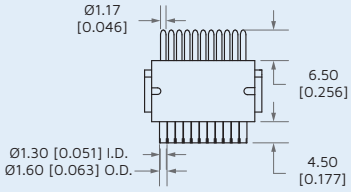	Male	Solder Cup Up to 20 AWG	1.27 µm gold	LDMSTH
			0.25 µm gold	LDMST
				LRDMST
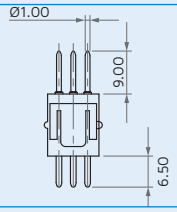	Male	Straight dip solder	1.27 µm gold	LDMDTH
			0.25 µm gold	LDMDT
				LRDMDT
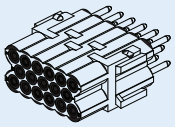	Female	Crimp 20 AWG wire	1.27 µm gold	LDFRTAH
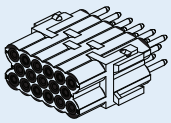	Male	Crimp 20 AWG wire	1.27 µm gold	LDMRTH

Dimensions are in mm [inches].

Modules E and RE

8 A Contact Rating

1.5 units, 9 Hypertac® hyperboloid fixed contacts, Ø1.50 [0.059]

E

RE

EN45545 fire and smoke compliant

Module	Gender	Termination	Contact Mating Surface Plating	Part Number
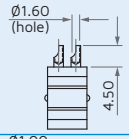	Female	Solder Cup Up to 16 AWG	1.27 µm gold	LEFSTAH
			0.25 µm gold	LREFSTT
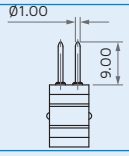	Female	Straight Dip Solder	1.27 µm gold	LEFDTAH
			0.25 µm gold	LREFDTT
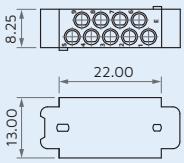	Empty Female Block	–	–	LEFHT (Ref. 15644)
				LREFHT (Ref. 25672)
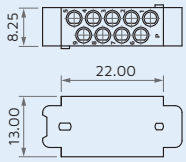	Empty Male Block	–	–	LEMHT (Ref. 15645)
				LREMHT (Ref. 25671)
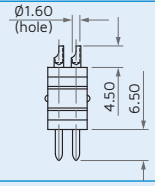	Male	Solder Cup Up to 16 AWG	1.27µm gold	LEMSTH
			0.25 µm gold	LEMST
				LREMST
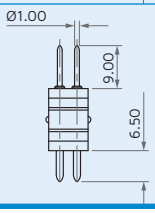	Male	Straight Dip Solder	1.27µm gold	LEMDTH
			0.25 µm gold	LEMDT
				LREMDT

Dimensions are in mm [inches].

Module F

Fiber Optic and Coax or Power Module

1.5 units, 2 butt joint fiber optic contacts and 1 coaxtac or 1 power (25 A) contact

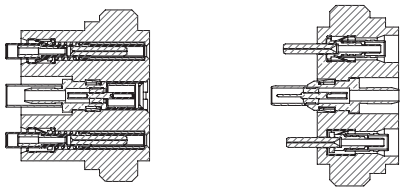

Module	Gender	Module Part Number	Contact part numbers (sold separately)
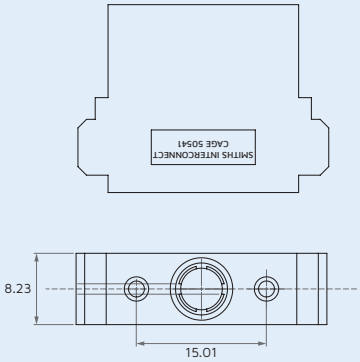	Female Empty Block	LFFHT	**For Female Module:** **Fiber Optic:** Socket terminus 1.3 mm 62.5/125 um multimode FO cable Contact p/n: 853-0011788-001 Protective cap: 218-0000508 **Coaxtac coaxial contacts:** p/n for RG316 (crimp): - YCX0315-002AH p/n for RG316DB (crimp): - YCX0315-019AH p/n for RG405 or T-Flex 405 (solder): - YCX0315-001AH **Hypertac® Power Contacts (25A):** p/n for 12-14 AWG crimp socket: - YSK025-031AH
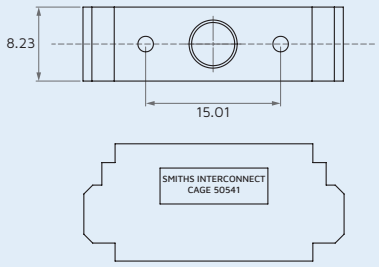	Male Empty Block	LFMHT	**For Male Module** **Fiber Optic:** Pin terminus for 1.3 mm 62.5/125 um multimode FO cable Contact p/n: 238533-0000 (dust cap included) **Coaxtac coaxial contacts** p/n for RG316 (crimp): - YCX0315-004H p/n for RG316DB (crimp): - YCX0315-018H p/n for RG405 or T-Flex 405 (solder): - YCX0315-003H **Hypertac® Power Contacts (25A)** p/n for 12-14 AWG crimp pin: - YPN025-024H

Notes:

1. Contacts are not included with the insulators, must be purchased separately and installed in the insulator modules after termination.
2. Insulator material: polyetherimide, black
3. Coax tools:
   - Centre conductor: AFM8 crimper and T1957 positioner
   - Outer conductor: HX3 crimper and T1958 (T2019 for RG316DB) die set
   - Extraction tool: T1982

Dimensions are in mm [inches].

Module G

200 A Contact Rating

3.5 units, 1 Hypertac® hyperboloid removable crimp contact, Ø6.08 [0.239]

Recommended for LEH and LPH frames only.

File No.: UL E102195

Module	Gender	Wire Gauge	I.D.	O.D.	Contact Mating Surface Plating	Part Number	Replacement Contacts
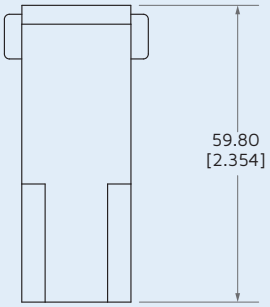	Female	1-0	11.30 [0.445]	—	1.27 µm gold	LGFRTAH	YSK0612-015AH
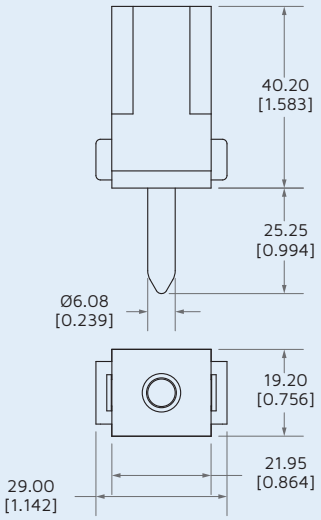	Male	1-0	11.30 [0.445]	—	0.76 µm gold	LGMRTI	YPN0612-021RI

Dimensions are in mm [inches].

Modules H and RH

Coax

2 units, 2 coax removable contacts

H

RH

EN45545 fire and smoke compliant

Module	Gender	Termination	Part Number	Replacement Contacts	Cable Termination Instructions*
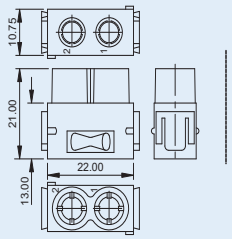	Female	Crimp Coaxial for RG316 and for RG174	LHFRTAH	18024/1	Ask factory.
			LRHFRTAH		
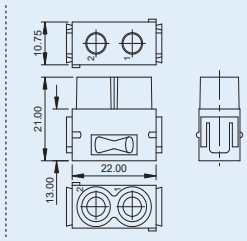	Male	Crimp Coaxial for RG316 and for RG174	LHMRTH	18024/2	Ask factory.
			LRHMRTH		

* Please request specs from our customer service department.

Contact Resistance

Nominal Impedance: 50 Ω
Frequency Range: DC to 2 GHz
Contact Resistance
- Inner Contact: 10mΩmax.
- Outer Contact: 3 mΩ max.

Temperature Rating: –55 °C to 125 °C
Voltage Standing Wave Ratio
- DC to 2 GHz: 1:72:1 max.

RF Transmission Loss: 0.21 dB at 18 GHz
Insulation Resistance: 200 MΩ min.
DWV: 250 V RMS
Extraction Force Per Contact: 10N max.
Connector Life Cycle: 500 min

Materials and finishes

Materials: Brass, beryllium copper, and PTFE fluorocarbon
Finishes
- **Centre Contacts & Housings**: Gold over nickel over copper

Dimensions are in mm [inches].

Module K

100 A Contact Rating

2.5 units, 1 Hypertac® hyperboloid removable crimp contact, Ø4.30 [0.169]

Recommended for LEH and LPH frames only.

File No.: UL E102195

Module	Gender	Wire Gauge	I.D.	O.D.	Contact Mating Surface Plating	Part Number	Replacement Contacts
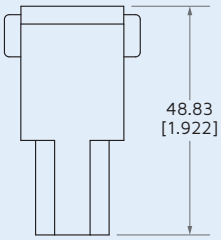	Female	4	7.20 [0.283]	—	1.27 µm gold	LKFRTAH	YSK043-010AH
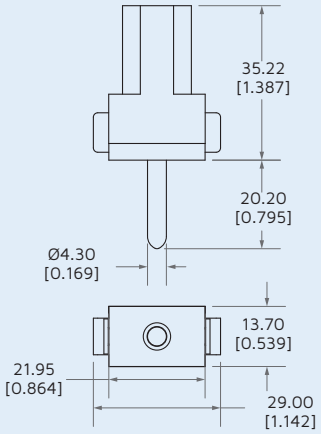	Male	4	7.20 [0.283]	—	0.76 µm gold	LKMRTI	YPN043-016RI

Dimensions are in mm [inches].

Module K4

100 A Contact Rating

6 units, 4 Hypertac® hyperboloid removable contact, Ø 4.30 [0.169]

Module	Gender	Termination	Contact Mating Surface Plating	Part Number	Replacement Contacts
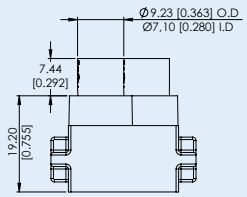	Female	Crimp 4 AWG	1.27 µm gold	LK4FRTAH	YSK043-027HT
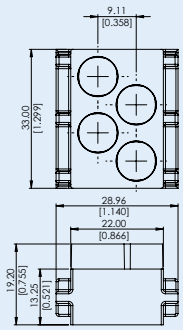	Empty female block	-	-	LK4FHT (ZLM004-004)	-
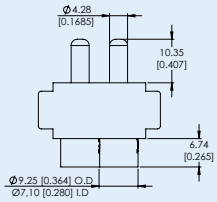	Male	Crimp 4 AWG	1.27 µm gold	LK4MRTH	YPN043-038H
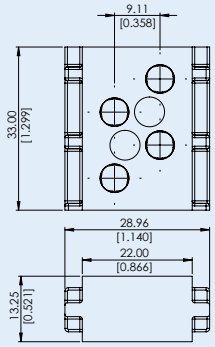	Empty male block	-	-	LK4MHT (ZLM004-003)	-

Dimensions are in mm [inches].

Modules M and RM

50 A Contact Rating

2 units, 2 Hypertac® hyperboloid fixed contacts, Ø3.50 [0.138]

Also mates with U crimp modules.

M

File No.: UL E102195

RM

EN45545 fire and smoke compliant

Module	Gender	Termination	Contact Mating Surface Plating	Part Number
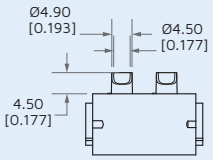	Female	Solder Cup Up to 8 AWG	1.27 µm gold	LMFSTAH
			0.25 µm	LRMFSTT
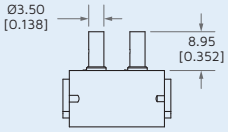	Female	Straight Dip Solder	1.27 µm gold	LMFDTAH
			0.25 µm	LRMFDTT
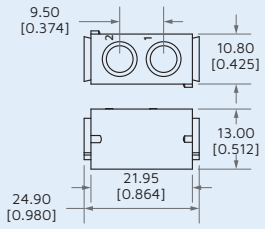	Empty Block	—	—	LMHT (ZLM002-001)
				LRMHT (Ref. 25668)
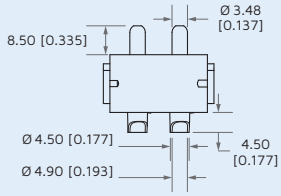	Male	Solder Cup Up to 8 AWG	1.27 µm gold	LMMSTH
			0.25 µm gold	LMMST
				LRMMST
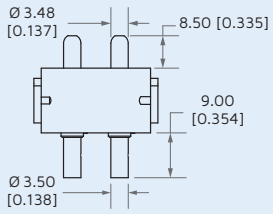	Male	Straight Dip Solder	1.27 µm gold	LMMDTH
			0.25 µm gold	LMMDT
				LRMMDT

Dimensions are in mm [inches].

Module N

15 A Contact Rating

4 units, 4 Hypertac® hyperboloid fixed contact, Ø 2.00 [0.078]

Module	Gender	Termination	Contact Mating Surface Plating	Part Number
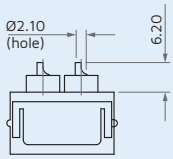	Female	Solder Cup Up to 14 AWG	1.27 µm gold	LNFSTAH
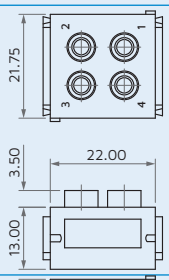	Empty Female Block	–	–	LNFHT (Ref. 030.088.1000)
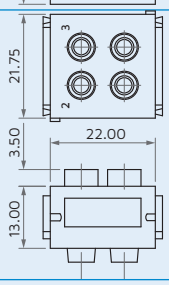	Empty Male Block	–	–	LNMHT (Ref. 030.087.1000)
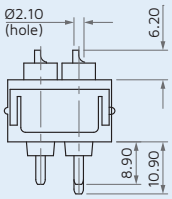	Male	Solder Cup Up to 14 AWG	1.27 µm gold	LNMSTH
			0.25 µm gold	LNMST

Dimensions are in mm [inches].

Module PN*

Pneumatic**

2 units, 2 pneumatic contacts

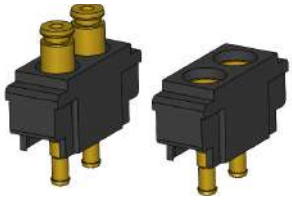

Module	Gender	Part Number	Tubing ID	Contacts
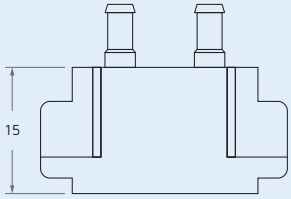	Female	LPNF	4 mm	M0918 Nominal ID 2.5 mm
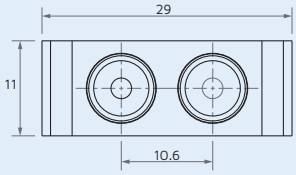	Empty	LPNH	—	—
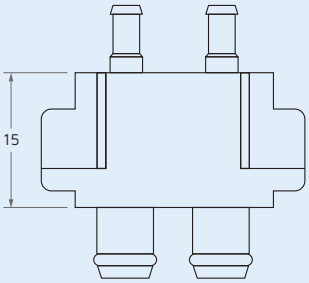	Male	LPNM	4 mm	M0919 Nominal ID 2.5 mm

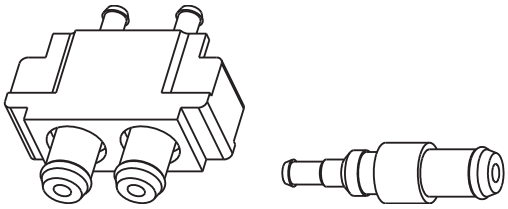

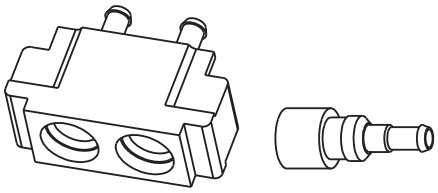

* The order of configurations with the pneumatic module is subject to MOQ, please contact the factory for more information

** Operating medium: Compressed air in accordance with ISO8573-1:2010 [7:-:-]
Note on operating and pilot medium: Lubricated operation possible

Dimensions are in mm [inches].

Modules Q and RQ

8 A Contact Rating

1 unit, 9 Hypertac® hyperboloid fixed contacts, Ø1.00 [0.039]

Q

RQ

EN45545 fire and smoke compliant

Module	Gender	Termination	Contact Mating Surface Plating	Part Number
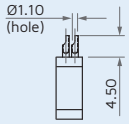	Female	Solder Cup Up to 18 AWG	1.27 µm gold	LQFSTAH
			0.25 µm gold	LRQFSTT
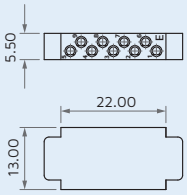	Empty Female Block	–	–	LQFHT (Ref. 16877)
				LRQFHT (Ref. 25680)
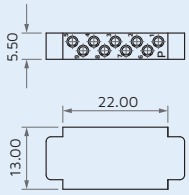	Empty Male Block	–	–	LQMHT (Ref. 16878)
				LRQMHT (Ref. 25679)
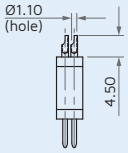	Male	Solder Cup Up to 18 AWG	1.27 µm gold	LQMSTH
			0.25 µm gold	LQMST
				LRQMST

Dimensions are in mm [inches].

Module R

8 A Contact Rating

1 unit, 5 Hypertac® hyperboloid "Snap-In" crimp contacts, Ø1.50 [0.059]

Can be mounted by itself or in a frame. Also mates with A modules.

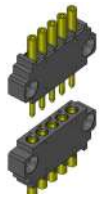

File No.: UL E102195

Module	Gender	Wire Gauge	I.D.	O.D.	Contact Mating Surface Plating	Part Number	Replacement Contacts
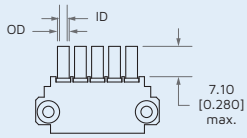	Female	18 to 22	1.45 [0.057]	2.65 [0.104]	1.27 µm gold	LRF1TAH	YSK015-013AH
		22 to 26	0.90 [0.035]	1.30 [0.051]		LRF2TAH	YSK015-142AH
		16	1.80 [0.071]	2.75 [0.108]		LRF3TAH	YSK015-014AH
		14	2.00 [0.079]	3.10 [0.122]		LRF4TAH	YSK015-045AH
		28	0.56 [0.022]	1.93 [0.076]		LRF5TAH	YSK015-009AH
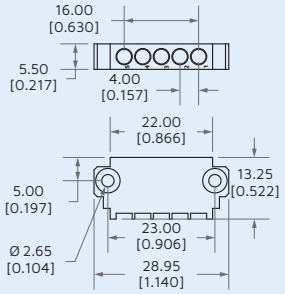	Empty Block	—	—	—	—	LRH (ZLR005-001)	—
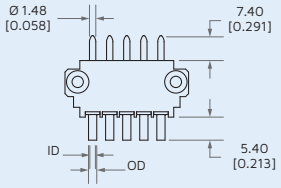	Male	18 to 22	1.45 [0.057]	2.65 [0.104]	1.27 µm gold	LRM1TH	YPN015-009RH
					0.25 µm gold	LRM1T	YPN015-009RG
		22 to 26	0.90 [0.035]	1.30 [0.051]	1.27 µm gold	LRM2TH	YPN015-129H
					0.25 µm gold	LRM2T	YPN015-129G
		16	1.80 [0.071]	2.75 [0.108]	1.27 µm gold	LRM3TH	YPN015-010H
					0.25 µm gold	LRM3T	YPN015-010G
		14	2.00 [0.079]	3.10 [0.122]	1.27 µm gold	LRM4TH	YPN015-033RH
					0.25 µm gold	LRM4T	YPN015-033RG
		28	0.56 [0.022]	1.93 [0.076]	1.27 µm gold	LRM5TH	YPN015-004RH
					0.25 µm gold	LRM5T	YPN015-004RG

Dimensions are in mm [inches].

Module RR

8 A Contact Rating

1 unit, 5 Hypertac® hyperboloid "Snap-In" crimp contacts, Ø1.50 [0.059]

Mates with A modules.

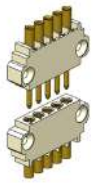

EN45545 fire and smoke compliant

Module	Gender	Termination	Contact Mating Surface Plating	Part Number	Replacement Contacts
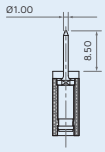 **LRRFDTT** 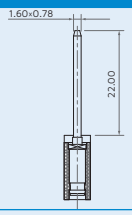 **LRRFW1TT**	Female	Straight dip solder	0.25 µm gold	LRRFDTT	0151322-30-N1
		Rectangular Wire Wrap		LRRFW1TT	150130-N1
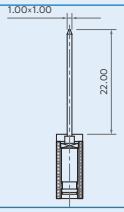 **LRRFW2TT** 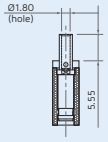 **LRRFRTT**		Square Wire Wrap		LRRFW2TT	0151332-40-N1
		Crimp 16 to 20 AWG		LRRFRTT	16813/Z52
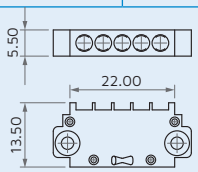	Empty block	—	—	LRRHT (Ref. 60185-00)	—
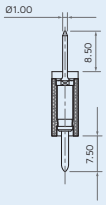 **LRRMDT** 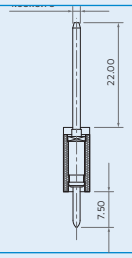 **LRRMW1T**	Male	Straight dip solder	0.25 µm gold	LRRMDT	16480/T12
		Rectangular Wire Wrap		LRRMW1T	16712/T12
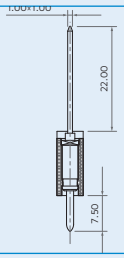 **LRRMW2T** 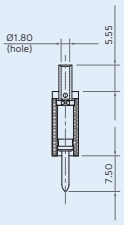 **LRRMRT**		Square Wire Wrap		LRRMW2T	0151331-56-OF
		Crimp 16 to 20 AWG		LRRMRT	15947/T12

Dimensions are in mm [inches].

Module RR1

8 A Contact Rating

1 unit, 5 Hypertac® hyperboloid "Snap-In" crimp contacts, Ø1.50 [0.059]

Can be mounted by itself or in a frame. Also mates with A modules.

EN45545 fire and smoke compliant

Module	Gender	Termination	Contact Mating Surface Plating	Part Number	Replacement Contacts
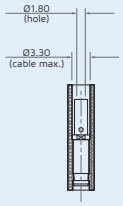	Female	Crimp 16 to 20 AWG	0.25 µm gold	LRR1FRTT	16813/Z52
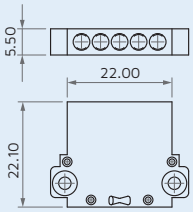	Empty block	—	—	LRR1HT (Ref. 60187-00)	—
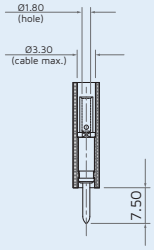	Male	Crimp 16 to 20 AWG	0.25 µm gold	LRR1MRT	15947/T12

Dimensions are in mm [inches].

Module S

15 A Contact Rating

1.5 units, 3 Hypertac® hyperboloid "Snap-In" crimp contacts, Ø2.50 [0.098]

Can be mounted by itself or in a frame. Also mates with B modules.

File No.: UL E102195

Module	Gender	Wire Gauge	I.D.	O.D.	Contact Mating Surface Plating	Part Number	Replacement Contacts
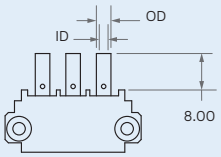	Female	16 to 22	1.50 [0.059]	3.10 [0.122]	1.27 µm gold	LSF1TAH	YSK025-003AH
		14 to 16	1.95 [0.077]	3.10 [0.122]		LSF2TAH	YSK025-004AH
		12	2.54 [0.1]	3.81 [0.15]		LSF4TAH	YSK025-013AH
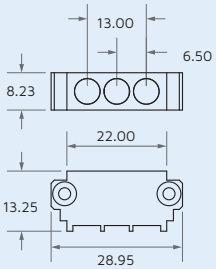	Empty block	—	—	—	—	LSHT (ZLS003-002)	—
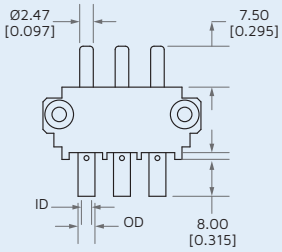	Male	16 to 22	1.50 [0.059]	3.10 [0.122]	1.27 µm gold	LSM1TH	YPN025-002H
					0.25 µm gold	LSM1T	YPN025-002G
		14 to 16	1.95 [0.077]	3.10 [0.122]	1.27 µm gold	LSM2TH	YPN025-003H
					0.25 µm gold	LSM2T	YPN025-003G
		12	2.54 [0.1]	3.81 [0.15]	1.27 µm gold	LSM4TH	YPN025-011RH
					0.25 µm gold	LSM4T	YPN025-011RG

Dimensions are in mm [inches].

Module RS

15 A Contact Rating

1.5 units, 3 Hypertac® hyperboloid "Snap-In" crimp contacts, Ø2.50 [0.098]

Can be mounted by itself or in a frame. Also mates with B modules.

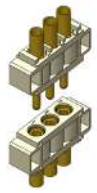

EN45545 fire and smoke compliant

Module	Gender	Wire Gauge	I.D.	O.D.	Contact Mating Surface Plating	Part Number	Replacement Contacts
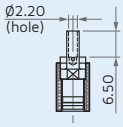	Female	14 to 16	2.20 [0.087]	3.10 [0.122]	0.25 µm gold	LRSF2TT	16825/Z72
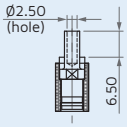		12	2.50 [0.098]	3.80 [0.15]		LRSF4TT	17669/Z72
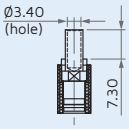		10 to 12	3.40 [0.134]	4.40 [0.173]		LRSF5TT	19683/Z72
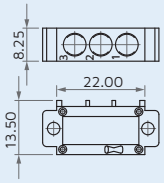	Empty block	—	—	—	—	LRSHT (Ref. 47051-00)	—
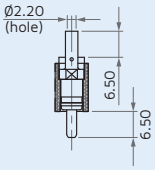	Male	14 to 16	2.20 [0.087]	3.10 [0.122]	0.25 µm gold	LRSM2T	12318/T12
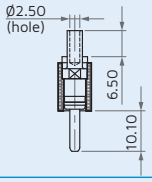		12	2.50 [0.098]	3.80 [0.15]		LRSM4T	17667/T12
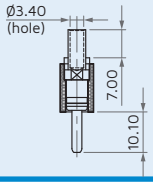		10 to 12	3.40 [0.134]	4.40 [0.173]		LRSM5T	19684/T12

Dimensions are in mm [inches].

Module T and RT

8 A Contact Rating

1 unit, 5 Hypertac® hyperboloid "Snap-In" crimp contacts, Ø1.50 [0.059]

Can be mounted by itself or in a frame. Also mates with A modules.

T

RT

EN45545 fire and smoke compliant

Module		Gender	Wire Gauge	I.D.	O.D.	Contact Mating Surface Plating	Part Number	Replacement Contacts
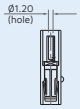	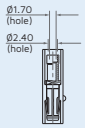	Female	20 to 24	1.20 [0.047]	2.00 [0.079]	1.27	LTF1TAH	(Ref. 18748/Z66)
						0.25	LRTF1TT	(Ref. 18748/Z52)
			16 to 20	1.70/2.40 [0.070/0.094]	2.80/3.07 [0.110/0.121]	1.27	LTF2TAH	(Ref. 15837/Z66)
LTF1TAH/ LRTF1TT	**LTF2TAH/ LRTF2TT**					0.25	LRTF2TT	(Ref. 15837/Z52)
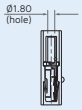	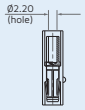		16 to 20	1.80 [0.071]	2.75 [0.108]	1.27	LTF3TAH	(Ref. 19171/Z66)
						0.25	LRTF3TT	(Ref. 19171/Z52)
			14	2.20 [0.087]	3.07 [0.121]	1.27	LTF4TAH	(Ref. 18412/Z66)
LTF3TAH/ LRTF3TT	**LTF4TAH/ LRTF4TT**					0.25	LRTF4TT	(Ref. 18412/Z52)
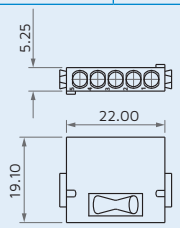		Empty block	—	—	—	—	LTHT (Ref. 15247)	—
			—	—	—	—	LRTHT (Ref. 25681)	—
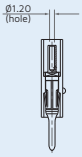	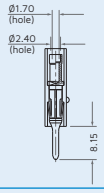	Male	18 to 22	1.20 [0.047]	2.00 [0.079]	1.27	LTM1TH	(Ref. 18747/T15)
						0.25	LRTM1T	(Ref. 18747/T12)
			22 to 26	1.70/2.40 [0.070/0.094]	2.80/3.07 [0.110/0.121]	1.27	LTM2TH	(Ref. 15835/T15)
LTM1TH/ LRTM1T	**LTM2TH/ LRTM2T**					0.25	LRTM2T	(Ref. 15835/T12)
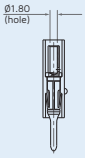	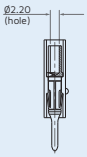		16	1.80 [0.071]	2.75 [0.108]	1.27	LTM3TH	(Ref. 19168/T15)
						0.25	LRTM3T	(Ref. 19168/T12)
			14	2.20 [0.087]	3.07 [0.121]	1.27	LTM4TH	(Ref. 18410/T15)
LTM3TH/ LRTM3T	**LTM4TH/ LRTM4T**					0.25	LRTM4T	(Ref. 18410/T12)

Dimensions are in mm [inches].

Module U

25 A or 50 A Contact Rating

2 units, 2 Hypertac® hyperboloid "Snap-In" crimp contacts, Ø3.50 [0.138]

Also mates with C and M modules.

File No.: UL E102195

Module	Gender	Wire Gauge	I.D.	O.D.	Contact Mating Surface Plating	Current Rating	Part Number	Replacement Contacts
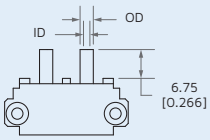	Female	20 to 22	1.50 [0.059]	3.10 [0.122]	1.27 µm gold	25 A	LUF1TAH	YSK035-009AH
		16 to 18	1.95 [0.077]	3.10 [0.122]	1.27 µm gold	25 A	LUF2TAH	YSK035-010AH
		12 to 14	2.85 [0.112]	4.10 [0.161]	1.27 µm gold	25 A	LUF3TAH	YSK035-011AH
		6	5.50 [0.217]	7.25 [0.285]	1.27 µm gold	50 A	LUF4TAH	YSK035-030AH
		8 to 10	4.50 [0.177]	5.50 [0.217]	1.27 µm gold	50 A	LUF5TAH	YSK035-028AH
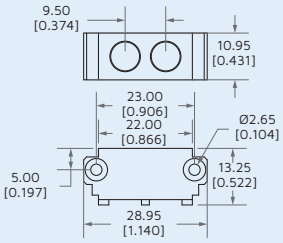	Empty Block	—	—	—	—	—	LUH (ZLU002-001)	—
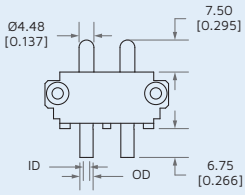	Male	20 to 22	1.50 [0.059]	3.10 [0.122]	1.27 µm gold	25 A	LUM1TH	YPN035-005H
					0.25 µm gold		LUM1T	YPN035-005G
		16 to 18	1.95 [0.077]	3.10 [0.122]	1.27 µm gold	25 A	LUM2TH	YPN035-006H
					0.25 µm gold		LUM2T	YPN035-006G
		12 to 14	2.85 [0.112]	4.10 [0.161]	1.27 µm gold	25 A	LUM3TH	YPN035-007H
					0.25 µm gold		LUM3T	YPN035-007G
		6	5.50 [0.217]	7.25 [0.285]	1.27 µm gold	50 A	LUM4TH	YPN035-025RH
					0.25 µm gold		LUM4T	YPN035-025RG
		8 to 10	4.50 [0.177]	5.50 [0.217]	1.27 µm gold	50 A	LUM5TH	YPN035-023RH
					0.25 µm gold		LUM5T	YPN035-023RG

Dimensions are in mm [inches].

Module RU

25 A Contact Rating

2 units, 2 Hypertac® hyperboloid "Snap-In" crimp contacts, Ø3.50 [0.138]

Also mates with RC and RM crimp modules.

File No.: UL E102195

Module	Gender	Wire Gauge	I.D.	O.D.	Contact Mating Surface Plating	Part Number	Replacement Contacts
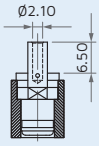	Female	14 to 18	2,10 [0,083]	4,10 [0,161]	0.25 µm gold	LRUF1TT	16722/Z72
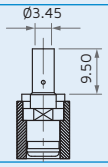		10 to 12	3,45 [0,136]	4,57 [0,18]		LRUF2TT	16601/Z72
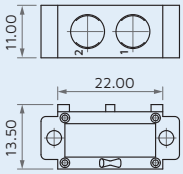	Empty block	—	—	—	—	LRUHT (Ref. 47049-00)	—
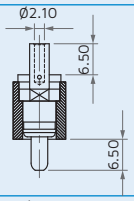	Male	14 to 18	2,10 [0,083]	4,10 [0,161]	0.25 µm gold	LRUM1T	12230/T12
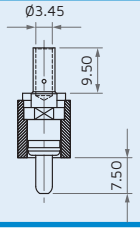		10 to 12	3,45 [0,136]	4,57 [0,18]		LRUM2T	16600/T12

Dimensions are in mm [inches].

Module V (Coax)

Coax

1.5 units, 3 Hypertac® hyperboloid coax contacts (on both signal and ground)

Can be mounted by itself or in a frame.

File No.: UL E102195

Module	Gender	Termination	Part Number	Replacement Contacts	Cable Termination Instructions*
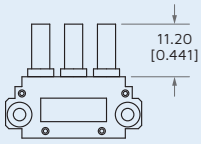	Female	Crimp Coaxial for RG316	LVFRTAH	YCX0315-002AH	S50302
		Crimp Coaxial for RG316DB	LVFR1TAH	YCX0315-019AH	
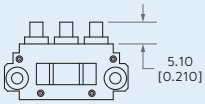	Female	Solder Coaxial for RG405 or T-Flex 405	LVFSTAH	YCX0315-001AH	S50301 or S50307 (T-Flex)
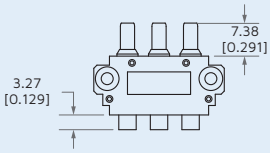	Male	Crimp Coaxial for RG316	LVMRTH	YCX0315-004H	S50304
		Crimp Coaxial for RG316DB	LVMR1TH	YCX0315-018H	
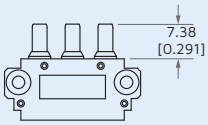	Male	Solder Coaxial for RG405 or T-Flex 405	LVMSTH	YCX0315-003H	S50303 or S50308 (T-Flex)

* Please request specs from our customer service department.

COAXTAC

Nominal Impedance: 50 Ω
Frequency Range:
- DC 3 GHz with RG316
- DC 18 GHz with RG405

Contact Resistance

Inner Contact: 8 mΩ max.
Outer Contact: 2 mΩ max.
Temperature Rating: −55 °C to 125 °C
Voltage Standing Wave Ratio:
- DC to 3 GHz: 1:20:1 max.
- 3 GHz to 18 GHz: 1:50:1 max.

RF Transmission Loss: 0.50 dB at 18 GHz
Insulation Resistance: 5,000 MΩ min.
DWV: 500 V RMS
Extraction Force Per Contact: 1.5 to 6.0 oz. max.; 3.0 oz. average
Connector Life Cycle: >25,000 cycles

Materials and finishes

Materials: Brass, beryllium copper, and PTFE fluorocarbon
Finishes
- **Centre Contacts and Housings**: Gold over nickel over copper
- **Wire**: Gold over nickel

Dimensions are in mm [inches].

Module V (Power)

25 A Contact Rating

1.5 units, 3 Hypertac® hyperboloid removable contacts, Ø2.50 [0.098]

Can be mounted by itself or in a frame.

File No.: UL E102195

Module	Gender	Termination	Contact Mating Surface Plating	Part Number	Replacement Contacts
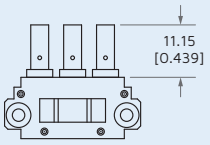	Female	Crimp 12 to 14 AWG	1.27 µm gold	LVFP1TAH	YSK025-031AH
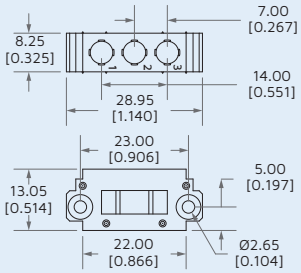	Empty Female Block	—	—	LVFHT (ZLV003-001)	—
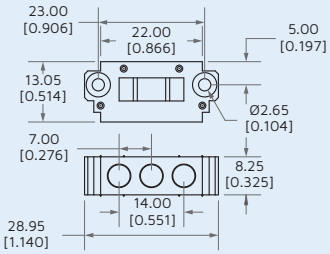	Empty Male Block	—	—	LVMHT (ZLV003-002)	—
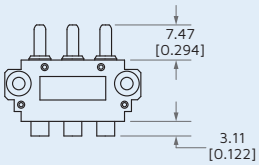	Male	Crimp 12 to 14 AWG	1.27 µm gold	LVMP1TH	YPN025-024H

Dimensions are in mm [inches].

Module W

4 A Contact Rating

2 units, 30 Hypertac® hyperboloid removable contacts, Ø0.60 [0.024]

File No.: UL E102195

Module	Gender	Termination	I.D.	O.D.	Contact Mating Surface Plating	Part Number	Replacement Contacts
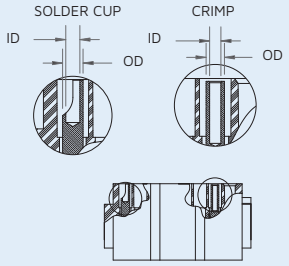 Guide holes in positions 1 and 32	Female	18 to 20 AWG	1.39 [0.055]	1.80 [0.071]	1.27 µm gold	LWFRRTAH	YSK006-089AH
		22 to 26 AWG	0.90 [0.035]	1.30 [0.051]		LWFRTAH	YSK006-011AH
		26 AWG	1.00 [0.039]	1.45 [0.057]		LWFSTAH	YSK006-010AH
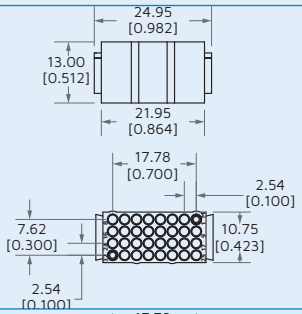	Empty Female Block	—	—	—	—	LWFHT (ZLM030-002)	—
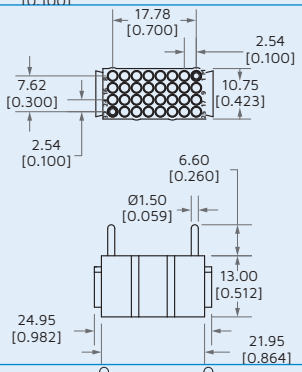	Empty Male Block	—	—	—	—	LWMHT	—
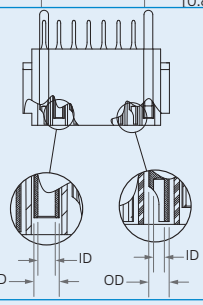 Guide holes in positions 1 and 32.	Male	18 to 20 AWG	1.39 [0.055]	1.80 [0.071]	1.27 µm gold	LWMRRTH	YPN006-158H
					0.25 µm gold	LWMRRT	YPN006-158G
		22 to 26 AWG	0.90 [0.035]	1.30 [0.051]	1.27 µm gold	LWMRTH	YPN006-021H
					0.25 µm gold	LWMRT	YPN006-021G
		26 AWG	1.00 [0.039]	1.45 [0.057]	1.27 µm gold	LWMSTH	YPN006-020H
					0.25 µm gold	LWMST	YPN006-020G

Dimensions are in mm [inches].

Modules Z1 and RZ1

25 A or 50 A Contact Rating

2 units, 2 Hypertac® hyperboloid removable crimp contacts, Ø3.50 [0.138]

Also mates with C and M modules.

Z

RZ

EN45545 fire and smoke compliant

Module	Gender	Termination	I.D.	O.D.	Contact Mating Surface Plating	Part Number	Replacement Contacts
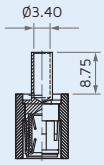	Female	10 to 12	3.40 [0.134]	4.40 [0.173]	1.27 µm gold	LZ1F1TAH	16829/Z66
					0.25 µm gold	LRZ1F1TT	16829/Z72
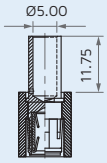		7	5.00 [0.197]	6.80 [0.268]	1.27 µm gold	LZ1F2TAH	19395/Z66
					0.25 µm gold	LRZ1F2TT	19395/Z72
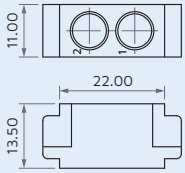	Empty block	—	—	—		LZ1HT (Ref. 19399)	—
						LRZ1HT (Ref. 25686)	
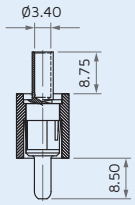	Male	10 to 12	3.40 [0.134]	4.40 [0.173]	1.27 µm gold	LZ1M1TH	18972/T15
					0.25 µm gold	LRZ1M1T	18972/T12
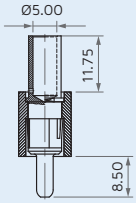		7	5.00 [0.197]	6.80 [0.268]	1.27 µm gold	LZ1M2TH	19398/T15
					0.25 µm gold	LRZ1M2T	19398/T12

Dimensions are in mm [inches].

Module Cat 5e

Cat 5e Data Transmission Contact

4 units, 4 Hypertac® hyperboloid snap-in contacts, Ø1.00 mm [0.039]

Data transmission	
Frequency range	up to 100 MHz
Data rates	up to 100Mbps for Ethernet (Cat 5 and 5e)
	up to 480Mbps for USB 2.0

EN45545 fire and smoke compliant

Module	Gender	Termination	Contact Mating Surface Plating	Part Number	Replacement Contacts
Module CAT5e - Low Profile					
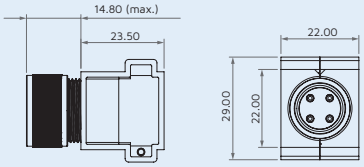	Female	Crimp 22 to 30 AWG	1.27 µm gold	LC5EFR1LPTAH	19681/Z65
		Crimp 18 to 24 AWG		LC5EFR2LPTAH	18369/Z78
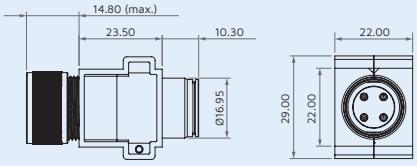	Male	Crimp 22 to 30 AWG		LC5EMR1LPTH	021.402.1020
		Crimp 18 to 24 AWG		LC5EMR2LPTH	021.001039.1020
Module CAT5e - Standard Version					
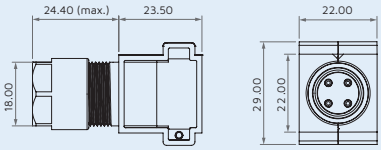	Female	Crimp 22 to 30 AWG	1.27 µm gold	LC5EFR1SVTAH	19681/Z65
		Crimp 18 to 24 AWG		LC5EFR2SVTAH	18369/Z78
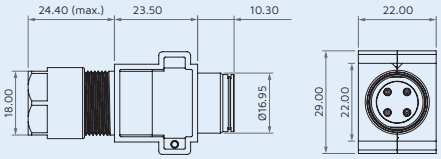	Male	Crimp 22 to 30 AWG		LC5EMR1SVTH	021.402.1020
		Crimp 18 to 24 AWG		LC5EMR2SVTH	021.001039.1020

Dimensions are in mm [inches].

Module Cat 6A

Cat 6A Data Transmission Contact

4 units, 8 Hypertac® hyperboloid snap-in contacts, Ø0.50 mm [0.020]

Data transmission	
Frequency range	up to 500 MHz
Data rates	up to 1Gbps for Ethernet (Cat 5e and 6)
	up to 10Gbps for Ethernet (Cat 6A)
	up to 480Mbps for USB 2.0

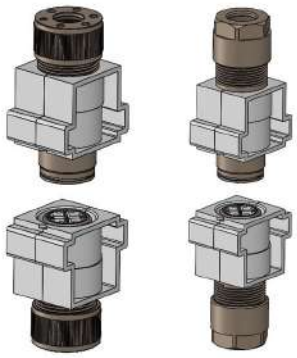

EN45545 fire and smoke compliant

Module	Gender	Termination	Contact Mating Surface Plating	Part Number	Replacement Contacts
Module CAT6A - Low Profile					
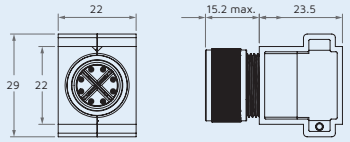	Female	Crimp 22 to 28 AWG	1.27 µm gold	LC6AFRLPTAH	850-5050232-000
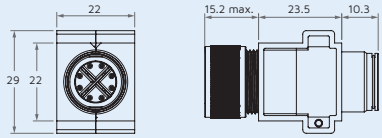	Male			LC6AMRLPTH	202-5050216-000/ T13
Module CAT6A - Standard Version					
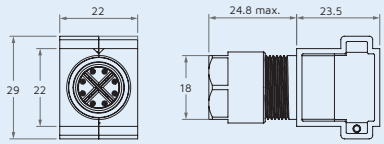	Female	Crimp 22 to 28 AWG	1.27 µm gold	LC6AFRSVTAH	850-5050232-000
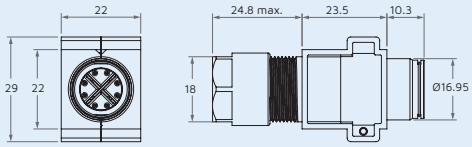	Male			LC6AMRSVTH	202-5050216-000/ T13

Dimensions are in mm [inches].

Female	Male	Crimp Tool	Crimp Die Set	Crimp Positioner	Insertion Tool	Extraction Tool	Mounting Bracket
Module D							
LDFR	LDMR	AF8	—	TP1786	T3153	T3153	—
Module F and V Coax Contacts							
Centre Conductor		AFM8	—	T1957	—	T1982	—
Outer Conductor		HX3	T1958 or T2019 for RG316DB	—			
Module F and V Power Contacts							
All Styles		M309	—	T1981	—	T1982	—
Module G							
LGFR	LGMR	T1501	—	T1536	—	T1500	T1551
Module K and K4							
LKFR	LKMR	T1501	—	T1535	—	T1507	T1551
LK4FR	LK4MR	T3206	T3205	—	—	—	—
Module R							
LRF1	LRM1	AF8	—	TP1650	S0150.01	S0150.01	—
LRF2	LRM2			TBA			
LRF3	LRM3			TP592			
LRF4	LRM4			TP1128			
LRF5	LRM5			TP613			
Module RR							
LRRFR	LRRMR	AF8	—	H463	S0150.01	S0150.01	—
Module RR1							
LRR1FR	LRR1MR	AF8	—	H463	S0150.01	S0150.01	—
Module RS							
LRSF2	LRSM2	FT8	—	SH463	S0250.01	S0250.01	—
LRSF4	LRSM4						
LRSF5	LRSM5						
Module RU							
LRUF1	LRUM1	M310	—	TP999	S0350.01	S0350.01	—
LRUF2	LRUM2						
Module S							
LSF1	LSM1	M309	—	TP1179	S0250.01	S0250.01	—
LSF2	LSM2						
LSF4	LSM4						
Module T and RT							
LTF1	LTM1	AF8	—	15807	Not Necessary	15808	—
LRTF1	LRTM1						
LTF2	LTM2						
LRTF2	LRTM2						
LTF3	LTM3						
LRTF3	LRTM3						
LTF4	LTM4						
LRTF4	LRTM4						
Module U							
LUF1	LUM1	T1264	—	TP1232	S0350.01	S0350.01	—
LUF2	LUM2						
LUF3	LUM3						
LUF4	—	WA23*	WA23-3*	WA23-030L*			
—	LUM4			WA23-025L*			
LUF5	LUM5	T1264	—	TP935			
Module Z1							
LZ1F1	LZ1M1	M310	—	TP999	S0350.01	S0350.01	—
LRZ1F1	LRZ1M1						
LZ1F2	LZ1M2						
LRZ1F2	LRZ1M2						
Module W							
LWFRR	LWMRR	AFM8	—	K547-2	T1866	S/DEM1.0060	—
LWFR	LWMR			K547			
LWFS	LWMST	-		-			
Module CAT5e							
LC5EFR1SVTAH	LC5EMR1SVTH	AF8	—	B-153	Not necessary	Not necessary	—
LC5EFR1LPTAH	LC5EMR1LPTH						
LC5EFR2SVTAH	LC5EMR2SVTH			B-200			
LC5EFR2LPTAH	LC5EMR2LPTH						
Module CAT6A							
LC6AFRSVTAH	LC6AMRSVTH	AFM8	—	SK2/2	Not necessary	Not necessary	—
LC6AFRLPTAH	LC6AMRLPTH						
Module H							
LHFRTAH	LHMRTH	11W150-000	—	11W150-402	—	11W102-000	—
LRHFRTAH	LRHMRTH						

*Purchase from Daniel Manufacturing Corp direct

Panel cut-out

Type: PA-EA-PB-EB

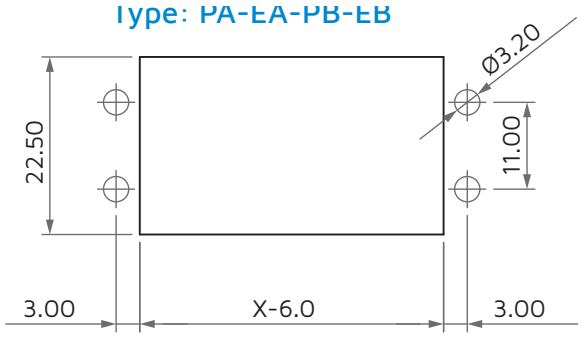

Type: PBV-EBV

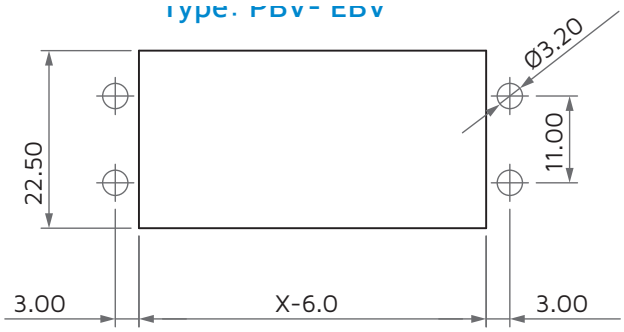

Type: PH

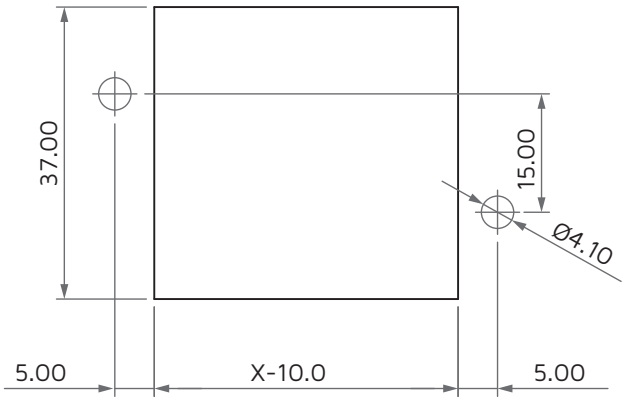

Type: EH

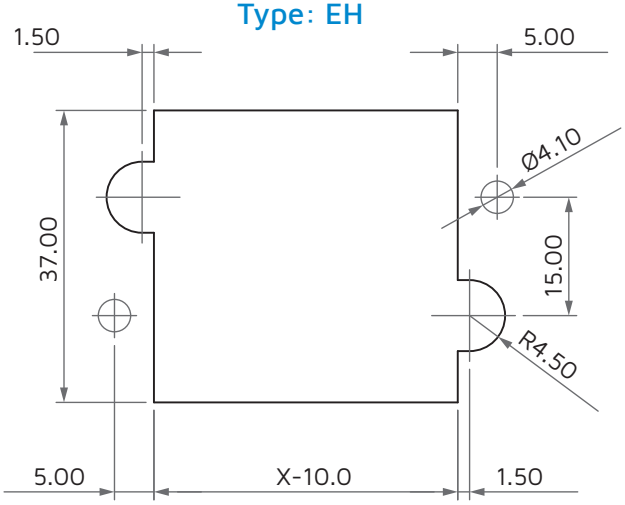

Type: MV-MY

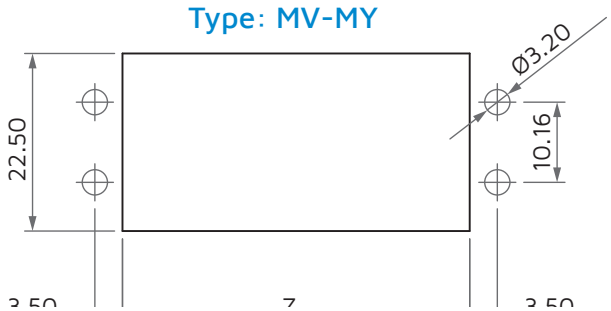

Units	Z
12	66.5
15	83.0
17	94.0
18	99.5
20	110.5
22	121.5

Dimensions are in mm [inches].

Disclaimer

All of the information included in this catalogue is believed to be accurate at the time of printing. It is recommended, however, that users should independently evaluate the suitability of each product for their intended application and be sure that each product is properly installed, used and maintained to achieve desired results.

Smiths Interconnect makes no warranties as to the accuracy or completeness of the information, and disclaims any liability regarding its use.

Smiths Interconnect reserves the right to modify design and specifications, in order to improve quality, keep pace with technological development or meet specific production requirements.

No reproduction or use without express permission of editorial and pictorial content, in any manner.

Notes

Worldwide Support

Connectors

Americas

Sales
connectors.uscsr@smithsinterconnect.com

Technical Support
connectors.ustechsupport@smithsinterconnect.com

Europe

Sales
connectors.emeacsr@smithsinterconnect.com

Technical Support
connectors.emeatechsupport@smithsinterconnect.com

Asia

Sales
asiacsr@smithsinterconnect.com

Technical Support
asiatechsupport@smithsinterconnect.com

Semiconductor Test

Americas

Sales
semi.uscsr@smithsinterconnect.com

Technical Support
semi.techsupport@smithsinterconnect.com

Europe

Sales
semi.emeacsr@smithsinterconnect.com

Technical Support
semi.techsupport@smithsinterconnect.com

Asia

Sales
semi.asiacsr@smithsinterconnect.com

Technical Support
semi.techsupport@smithsinterconnect.com

Fiber Optics & RF Components

Americas

Sales
focom.uscsr@smithsinterconnect.com

Technical Support
focom.techsupport@smithsinterconnect.com

Europe

Sales
focom.emeacsr@smithsinterconnect.com

Technical Support
focom.techsupport@smithsinterconnect.com

Asia

Sales
focom.asiacsr@smithsinterconnect.com

Technical Support
focom.techsupport@smithsinterconnect.com

RF/MW Subsystems

Americas, Europe & Asia

Sales
subsystems.csr@smithsinterconnect.com

Technical Support
subsystems.techsupport@smithsinterconnect.com

Connecting Global Markets

smithsinterconnect.com

Copyright© 2026 Smiths Interconnect | All rights reserved | Version 2.5
The information contained within this document is subject at all times to applicable Export Control regulations and legal requirements.