INDUSTRIAL@AMPHENOL
TRUSTED GLOBALLY

Amphenol Sine Systems, **USA**
Amphenol Tuchel Industrial, **GmbH**
Amphenol Audio, **USA**

eco|mate®

AQUARIUS™

Waterproof Connectors

www.amphenol-sine.com | +1 800 394 7732

We Are Amphenol

Global Interconnect Solution Supplier

For over 80 years Amphenol has enjoyed success as the interconnection technology provider of choice for industry leading companies around the world. Our organization works with leading manufacturers across a wide range of applications - including Energy Generation & Distribution, Transportation, Heavy Equipment, Factory Automation, Wireless Outdoor, Information Technology and Data Communications Equipment, Mobile Devices, Mobile Networks, Broadband Communication, Military and Commercial Aerospace, Industrial, Automotive and Chip Card Readers - enabling smarter, faster and better technologies to connect products to customer solutions.

Our engineers design innovative combinations of industry standard connectors and application specific shielding components to create assembly systems that set the standards for performance, reliability, and cost effectiveness. Our engineering, materials, and manufacturing organizations meet the high standards imposed by ISO 9001:2008 as well as many customer specific quality systems. Our performance has earned us ship to stock and world class performance awards from many major OEMs.

We are one of the largest interconnect solution suppliers in the world and supply a wide range of product solutions globally. The industrial market footprint of Amphenol covers more than 30 countries.

© 2015 Amphenol Sine Systems Corporation. Every effort has been made to ensure that the information contained in this document is accurate at the time of publication. Specifications or information stated in this document are subject to change without notice. www.amphenol-sine.com +1 800 394 7732

Table of Contents

We Are Amphenol
Global Interconnect Solution Supplier 1

Connector Guide
Introduction to eco|mate® Aquarius 6
Typical Applications 7
Overview 8
Connector Configurations 9
Insert Arrangements 10

Connector Solutions
3 POSITIONS 7A / 250V 15
3 POSITIONS 13A / 500V 21
3 POSITIONS 13A / 600V 27
3 POSITIONS 45A / 600V 35
4 (2+2) POSITIONS 13A & 7.5A/5.0A / 500V 73
4 (2+2) POSITIONS 23A & 7.5A/5.0A / 350V 83
4 (2+2) POSITIONS 23A & 7.5A/5.0A / 350V 85
4 (2+2) POSITIONS 23A & 13A / 500V 91
4 POSITIONS 7A / 250V 41
4 POSITIONS 13A / 500V 47
4 POSITIONS 13A / 500V 55
4 POSITIONS 23A / 500V 61
4 POSITIONS 45A / 500V 67
6 POSITIONS 7.5A/5.0A / 250V 99
6 POSITIONS 7.5A/5.0A / 250V 101
7 POSITIONS 13A / 500V 107
8 POSITIONS 13A / 500V 113
8 POSITIONS 13A / 500V 121
8 POSITIONS 23A / 375V 129
9 (4+5) POSITIONS 23A & 13A / 500V 135
10 POSITIONS 7.5A / 5A / 250V 143
12 POSITIONS 13A / 500V 151
19 POSITIONS 7.5A / 5A / 250V 159
19 POSITIONS 13A / 500V 167
23 POSITIONS 13A / 500V 175
26 POSITIONS 7.5A / 5A / 150V 183
32 POSITIONS 7.5A / 5A / 150V 191

Appendix
Glossary of Terms 198
Part Number Index 200

Introduction to eco|mate® Aquarius

Quick Reliable Mating

Bayonet Coupling
With a quick twist of the bayonet coupling system, these connectors provide positive tactile feedback to insure confident mating. This feature also reduces time and labor during installation.

Economical and Flexible

Mixed Power & Signal Layouts
Power and signal contacts can be combined in a variety of inserts providing a highly flexible interconnect solution to reduce system complexity and minimize installation costs.

Waterproof

IP68/69k in mated condition

Corrosion Resistant

Salt Spray >500 hours
Designed to withstand climate ingress and exposure to salt spray or a corrosive atmosphere while still maintaining mechanical and electrical functionality.

Wide Ranging Contact System

Flexible Contact Solutions
Our contact system offers the flexibility of using a wide variety of contact styles and wire gauges within various connectors, shell sizes and insert layouts, providing customers with a total solution.

eco|mate® Aquarius
Waterproof Connectors

Typical Applications

Marine

Telecom -Data Infrastructure

Building Automation & Control

Traffic Control

Energy - Power

Off Road

Mining - Railway

Instrumentation Measurement

eco|mate® Aquarius
Waterproof Connectors

Overview

ecomate Aquarius™ - Technical Specifications

IP Rating	Dynamic IP68/69K
Flammability Rating	UL94-VO
Fluid Resistance	Gas, oil, mineral oil, acid bath, basic bath
RoHS Compliant	**RoHS** All materials meet the requirements of the European Directive 2002/95/EC, Issue 13.2.2003
Approvals	UL Compliant
Temperature Range	**-40°C to +105°C** Standard Products with NBR Seal **-40°C to +125°C** Standard Products with Silicone Seal
Max. Current (AMP)	23A
Max. Voltage Rating (AC/DC)	500V
Contact Resistance	#16 <6 mΩ #20 <15 mΩ 2.5mm < 5 mΩ

Min. Mating Cycles	>500 mating cycles
Vibration	10-2000 Hz, level of 20 G's
Test Voltage Rating	1500V
Overvoltage Category	III
Strain Relief Clamp Range	1.5 - 14.0mm
Wire Range	28-12AWG
Housing Body	Thermoplastic UL94-VO
Insulation Inserts	Thermoplastic, UL94-VO
Insulation Resistance	5000 megohms min. of 25°C
Contacts	Copper Alloy (Gold, Tin & Silver Plating are available
Sealing Material	SR/NBR
Thermal Shock	No cracking, chipping or leaking after 20 test cycles from -55°C to 125°C

Connector Configurations

Plug

Plug

Plug with endcap

Receptacle

Jam Nut Receptacle

Square Flange Receptacle

Choose Contacts

Choice of Contacts
- Machined
- Stamped and Formed

Custom Solutions Available For:

- **Various Applications**
- **Extreme Environments**
- **Reducing the Number of Suppliers**
- **Molded Strain Relief**
- **Minimize Stress on Conductors**
- **360 ° Shielding Available**
- **Custom Logo**
- **Enhanced Sealing Properties**

Contact the Factory to learn more

Choose Contacts

Choice of Contacts
- Machined
- Stamped and Formed

eco|mate® Aquarius
Waterproof Connectors

Insert Arrangements

Shell Size	Contact #16 (Ø 1.6)			Mixed Power & Signal
8	Consult factory			Consult factory
10	 3 positions Contact #16 (Ø 1.6) 13A 500V *see page 21*	 4 positions Contact #16 (Ø 1.6) 13A 500V *see page 47*	Consult factory	 4 positions Contacts #16 (Ø 1.6) & #20 (Ø 1.0) 13A & 20# 5A/7.5A (machined) 500V AC/DC *see page 73*
12	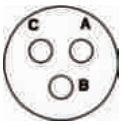 3 positions Contact #16 (Ø 1.6) 13A 600V *see page 27*	 4 positions Contact #16 (Ø 1.6) 13A 500V *see page 55*	 8 positions Contact #16 (Ø 1.6) 13A 500V *see page 113*	 4 positions Contacts #16 (Ø 1.6) & #20 (Ø 1.0) 23A & 20# 5A/7.5A (machined) 350V AC/DC *see page 83*
14	 7 positions Contact #16 (Ø 1.6) 13A 500V AC/DC *see page 107*	 8 positions Contact #16 (Ø 1.6) 13A 500V AC/DC *see page 121*	 12 positions Contact #16 (Ø 1.6) 13A 500V *see page 151*	 4 positions Contacts 2.5mm & 16 (Ø 1.6) 23A &13A 500V AC/DC *see page 91*
16	 19 positions Contact # 16 (Ø 1.6) 13A 500V page 167	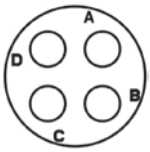 4 positions Contact #8 (Ø 3.6) 45A 500V AC/DC page 67	Consult factory	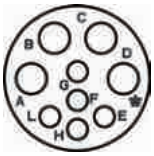 9 positions Contact 2.5mm & # 16 (Ø 1.6) 23A & 13A 350V AC/DC *page 135*
18	 23 positions Contact #16 (Ø 1.6) 13A 500V *page 175*	Consult factory		

Connector Guide

Insert Arrangements (con't)

Insert Arrangements are Pin Faceview

Shell Size	Contact #8	Contact 2.5mm	Contact #20 (Ø 1.0)	
8	Consult factory		 3 positions Contact #16 (Ø 1.6) 7A 250V *see page 15*	 4 positions Contact #16 (Ø 1.6) 7A 250V *see page 41*
10			 6 positions Contact #20 (Ø 1.0) 5A/7.5A (machined) 250V *see page 99*	Consult factory
12			 10 positions Contact #20 (Ø 1.0) 5A/7.5A (machined) 250V *see page 143*	
14	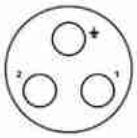 3 positions Contact #8 45A 600V AC/DC *see page 35*	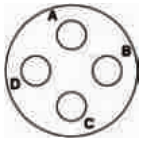 4 positions Contact 2.5mm 23A 500V AC/DC *see page 61*	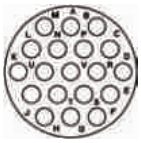 19 positions Contact #20 (Ø 1.0) 5A, 7.5A(machined) 250V *see page 159*	
16	Consult factory		 26 positions Contact #20 (Ø 1.0) 5A, 7.5A(machined) 250V *page 183*	
18		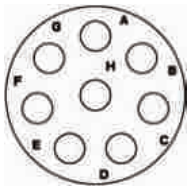 8 positions Contact 2.5mm 23A 500V AC/DC *page 129*	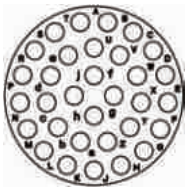 32 positions Contact #20 (Ø 1.0) 5A/7.5A (machined) 250V *page 191*	

eco | mate® Aquarius
Waterproof Plastic Connectors

Connector Solutions

3 POSITIONS 7A / 250V 15
3 POSITIONS 13A / 500V 21
3 POSITIONS 13A / 600V 27
3 POSITIONS 45A / 600V 35
4 POSITIONS 7A / 250V 41
4 POSITIONS 13A / 500V 47
4 POSITIONS 13A / 500V 55
4 POSITIONS 23A / 500V 61
4 POSITIONS 45A / 500V 67
4 (2+2) POSITIONS 13A & 7.5A/5.0A / 500V 73
4 (2+2) POSITIONS 23A & 7.5A/5.0A / 350V 83
4 (2+2) POSITIONS 23A & 7.5A/5.0A / 350V 85
4 (2+2) POSITIONS 23A & 13A / 500V 91
6 POSITIONS 7.5A/5.0A / 250V 99
6 POSITIONS 7.5A/5.0A / 250V 101
7 POSITIONS 13A / 500V 107
8 POSITIONS 13A / 500V 113
8 POSITIONS 13A / 500V 121
8 POSITIONS 23A / 375V 129
9 (4+5) POSITIONS 23A & 13A / 500V 135
10 POSITIONS 7.5A / 5A / 250V 143
12 POSITIONS 13A / 500V 151
19 POSITIONS 7.5A / 5A / 250V 159
19 POSITIONS 13A / 500V 167
23 POSITIONS 13A / 500V 175
26 POSITIONS 7.5A / 5A / 150V 183
32 POSITIONS 7.5A / 5A / 150V 191

STEP 1 Choose Receptacle Style	STEP 2 Choose Plug Style

Jam Nut Receptacles

RTS78N3P

RTS78N3S

Plugs

RTS6BS8N3P

RTS6BS8N3S

Square Flange Receptacles

RTS08N3P

RTS08N3S

SEE TABLE ON NEXT PAGE FOR PART DETAILS

CONTACTS SOLD SEPARATELY SEE PAGE 18

Shell Size: 8 Number of Contacts: 3 Contact Size: 20, Loaded
Sealing: IP67 /IP69k Salt Spray: 500h

eco|mate® Aquarius Standard Products

- Suitable For Indoor and Outdoor Applications
- EMI/RMI Shielding Capability with Appropriate Backshell
- Operating Temperature: -40°C to +105°C
- 500 Mating Cycles
- Contacts and Cord Grips Ordered Separately
- UL ECBT2 Certified*

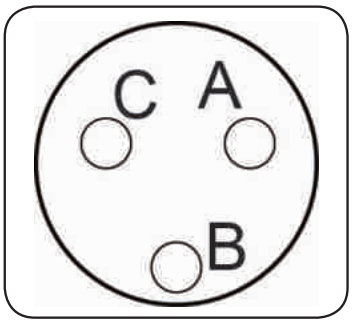

Insert Arrangement
Pin (Male) Faceview

Connector Part Numbers - Receptacles

PART NO#	Description	Temperature Range	Figure Drawing
RTS78N3P	Receptacle, jam nut, 3 positions, size 8, pin contact (loaded), NBR seal	-40C to 105C	1
RTS78N3S	Receptacle, jam nut, 3 positions, size 8, socket (loaded) contact NBR seal	-40C to 105C	2
RTS08N3P	Receptacle, square flange, 3 positions, size 8, pin contact (loaded), NBR Seal	-40C to 105C	3
RTS08N3S	Receptacle, square flange, 3 positions, size 8, socket contact (loaded), NBR Seal	-40C to 105C	4

Connector Part Numbers - Plugs

PART NO#	Description	Temperature Range	Figure Drawing
RTS6BS8N3P	Straight plug with cord grip, 3 positions, size 8, pin contact (loaded), NBR seal	-40C to 105C	5
RTS6BS8N3S	Straight plug with cord grip, 3 positions, size 8, socket contact (loaded), NBR seal	-40C to 105C	6

Contacts supplied separately see page 18

Shell Size: 8 Number of Contacts: 3 Contact Size: 20
Sealing: IP67 /IP69k Salt Spray: 500h

Dimensions Receptacles / Plugs

Jam Nut Receptacle

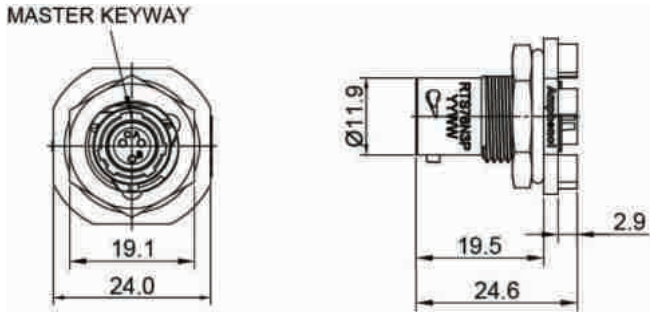

Male Figure 1 RTS78N3P

Jam Nut Receptacle

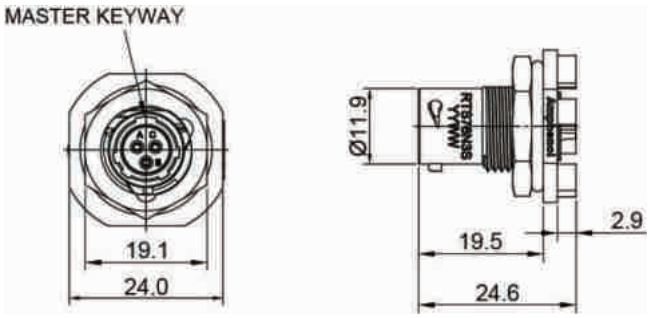

Female Figure 2 RTS78N3S

Square Flange Receptacle

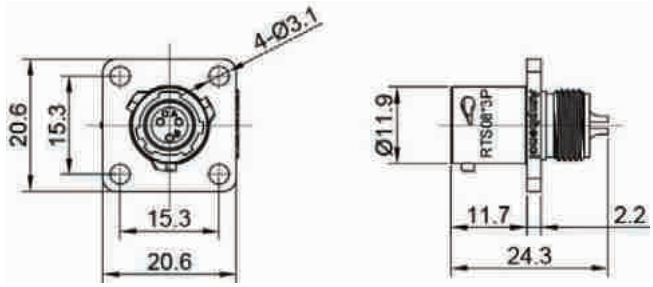

Male Figure 3 RTS08N3P

Square Flange Receptacle

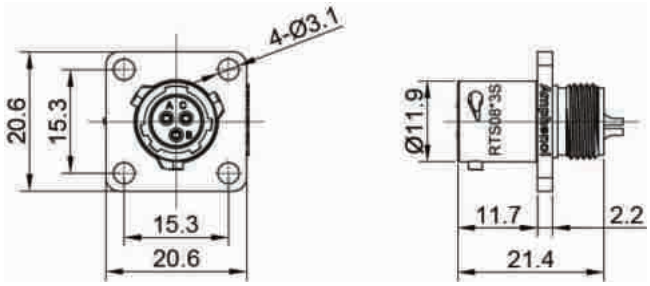

Female Figure 4 RTS08N3S

Plug

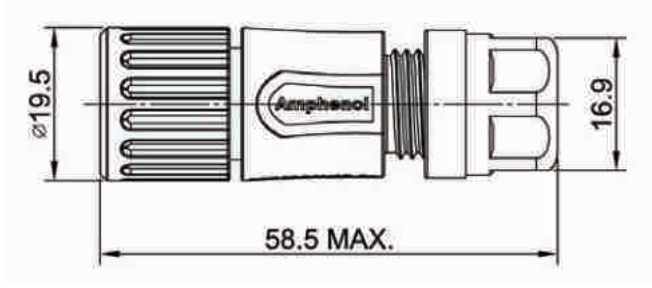

Male Figure 5 RTS6BS8N3P

Plug

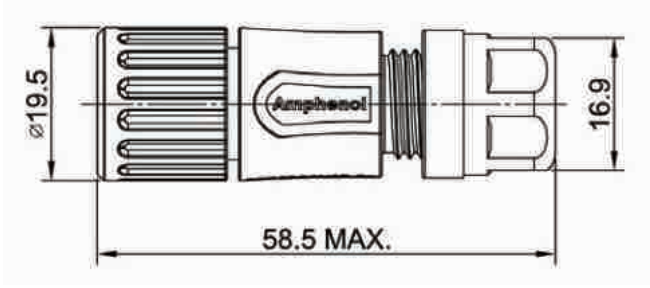

Feale Figure 6 RTS6BS8N3S

Shell Size: 8 Number of Contacts: 3 Contact Size: 20
Sealing: IP67 /IP69k Salt Spray: 500h

Accessories

Coding Color Ring, Yellow, Size 8

RTS8CCRY

Coding Color Ring, Green, Size 8

RTS8CCRG

Coding Color ring, Red, Size 8

RTS8CCRR

Sealing Plug, Size 20

AT13-204-2005

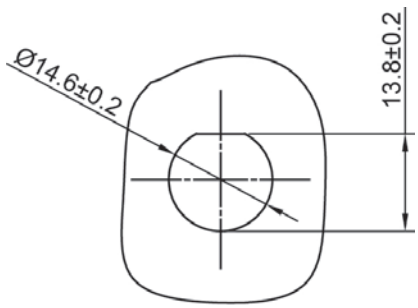

PANEL CUT OUT REFERENCE
PANEL THICKNESS : 3.2MM MAX.

Shell Size: 8 **Number of Contacts: 3** **Contact Size: 20**
Sealing: IP67 /IP69k **Salt Spray: 500h**

Contacts Machined

Machined Contacts

Crimp Contacts, Machined

Part Number		AWG	Wire Ranget (mm²)	Plating
Male	Female			
MP20W23F	MS20W23F	22-20	.34-.50	Gold Flash
MP20W23G5	MS20W23G5	22-20	.34-.50	Gold 5µ"
MP20W23G10	MS20W23G10	22-20	.34-.50	Gold 10µ"
MP20W23G15	MS20W23G15	22-20	.34-.50	Gold 15µ"
MP20W23G30	MS20W23G30	22-20	.34-.50	Gold 30µ"
MP24W23F	MS24W23F	26-24	.13-.25	Gold Flash
MP24W23G5	MS24W23G5	26-24	.13-.25	Gold 5µ"
MP24W23G10	MS24W23G10	26-24	.13-.25	Gold 10µ"
MP24W23G15	MS24W23G15	26-24	.13-.25	Gold 15µ"
MP24W23G30	MS24W23G30	26-24	.13-.25	Gold 30µ"
MP28W23F	MS28W23F	30-28	.05-.08	Gold Flash
MP28W23G5	MS28W23G5	30-28	.05-.08	Gold 5µ"
MP28W23G10	MS28W23G10	30-28	.05-.08	Gold 10µ"
MP28W23G15	MS28W23G15	30-28	.05-.08	Gold 15µ"
MP28W23G30	MS28W23G30	30-28	.05-.08	Gold 30µ"

Tools

Contact Extraction Tool, #20 (Ø 1.6) Contact

QXRT20

Hand Crimp Tool for Machined Contacts

MFX-3959

Pneumatic Crimp Tool for Machined Contact

MFX-3960

Shell Size: 8 **Number of Contacts: 3** **Contact Size: 20**
Sealing: IP67 /IP69k **Salt Spray: 500h**

Contacts Stamped & Formed

Stamped & Formed Contacts

Crimp Contacts, Stamped & Formed

Part Number		AWG	Wire Range (mm²)	Plating
Male	Female			
SP20W2F	SS20W2F	22-20	.34-.50	Gold Flash
SP20W2G5	SS20W2G5	22-20	.34-.50	Gold 5µ"
SP20W2G10	SS20W2G10	22-20	.34-.50	Gold 10µ"
SP20W2G15	SS20W2G15	22-20	.34-.50	Gold 15µ"
SP20W2G30	SS20W2G30	22-20	.34-.50	Gold 30µ"
SP24W2F	SS24W2F	26-24	.14-.25	Gold Flash
SP24W2G5	SS24W2G5	26-24	.14-.25	Gold 5µ"
SP24W2G10	SS24W2G10	26-24	.14-.25	Gold 10µ"
SP24W2G15	SS24W2G15	26-24	.14-.25	Gold 15µ"
SP24W2G30	SS24W2G30	26-24	.14-.25	Gold 30µ"
SP28W2F	SS28W2F	30-28	.05-.08	Gold Flash
SP28W2G5	SS28W2G5	30-28	.05-.08	Gold 5µ"
SP28W2G10	SS28W2G10	30-28	.05-.08	Gold 10µ"
SP28W2G15	SS28W2G15	30-28	.05-.08	Gold 15µ"
SP28W2G30	SS28W2G30	30-28	.05-.08	Gold 30µ"

Tools

Contact Extraction Tool, #20 (Ø 1.6) Contact

QXRT20

Hand Tool, Stamped & Formed Contact, Size 20 20-14AWG

MFX-3958

Crimp Die for Stamped & Formed Contact

MFX-3957

STEP 1
Choose Receptacle Style

STEP 2
Choose Plug Style

Jam Nut Receptacles

RTS710N3P03

RTS710N3S03

Plugs

RTS6BS10N3P03

RTS6BS10N3S03

Square Flange Receptacles

RTS010N3P03

RTS010N3S03

SEE TABLE ON NEXT PAGE FOR PART DETAILS

CONTACTS SOLD SEPARATELY SEE PAGE 24

Shell Size: 10 Number of Contacts: 3 Contact Size: 16
Sealing: IP67 / IP69k Salt Spray: 500h

eco|mate® Aquarius Standard Products

- Suitable For Indoor and Outdoor Applications
- EMI/RMI Shielding Capability with Appropriate Backshell
- Operating Temperature: -40°C to +125°C
- 500 Mating Cycles
- Contacts and Cord Grips Ordered Separately
- UL ECBT2 Certified*

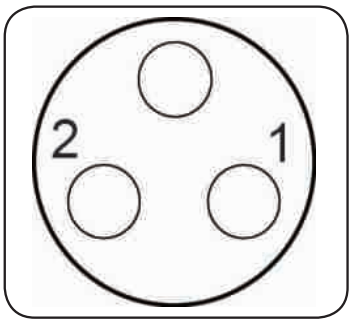

Insert Arrangement
Pin (Male) Faceview

Connector Part Numbers -Receptacles

PART NO#	Description	Temperature Range	Figure Drawing
RTS710N3P03	Receptacle, jam nut, 3 positions, size 10, pin contact, silicone rubber seal	-40 to 125°C	1
RTS710N3S03	Receptacle, jam nut, 3 positions, size 10, socket contact, silicone rubber seal	-40 to 125°C	2
RTS010N3P03	Receptacle, square flange, 3 positions, size 10, pin contact, silicone rubber seal	-40 to 125°C	3
RTS010N3S03	Receptacle, square flange, 3 positions, size 10, socket contact, silicone rubber seal	-40 to 125°C	4

Connector Part Numbers -Plugs

PART NO#	Description	Temperature Range	Figure Drawing
RTS6BS10N3P03	Straight plug with cord grip, 3 positions, size 10, pin contact, silicone rubber seal	-40 to 125°C	5
RTS6BS10N3S03	Straight plug with cord grip, 3 positions, size 10, socket contact, silicone rubber seal	-40 to 125°C	6

Contacts supplied separately see page 24

Shell Size: 10 Number of Contacts: 3 Contact Size: 16
Sealing: IP67 / IP69k Salt Spray: 500h

Dimensions Jam Nut / Square Flange Receptacles

Jam Nut Receptacle

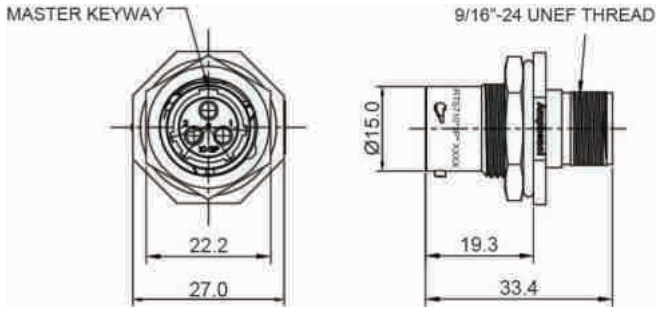

Male Figure 1 RTS710N3P03

Jam Nut Receptacle

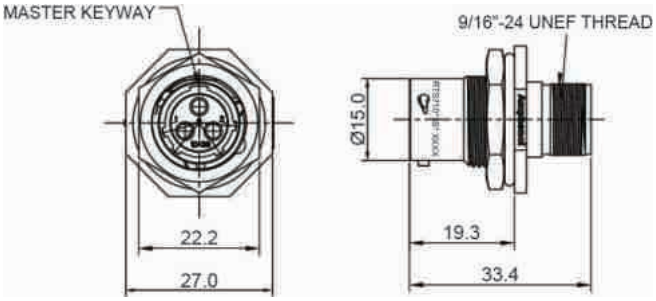

Female Figure 2 RTS710N3S03

Square Flange Receptacle

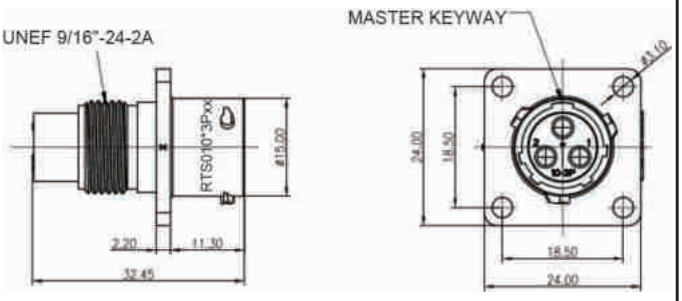

Male Figure 3 RTS010N3P03

Square Flange Receptacle

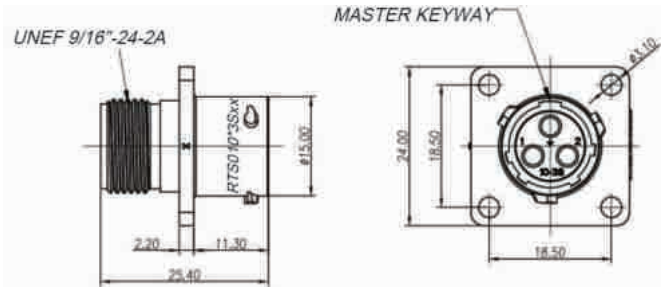

Female Figure 4 RTS010N3S03

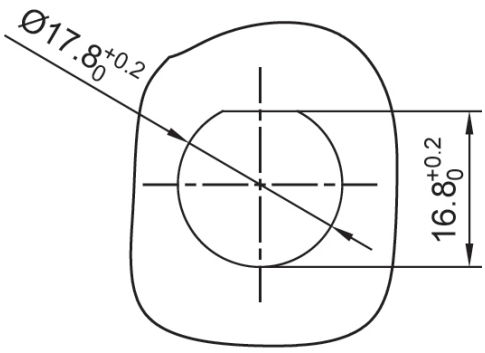

PANEL CUT OUT REFERENCE

Shell Size: 10 **Number of Contacts: 3** **Contact Size: 16**
Sealing: IP67 / IP69k **Salt Spray: 500h**

Dimensions Plugs

Plug

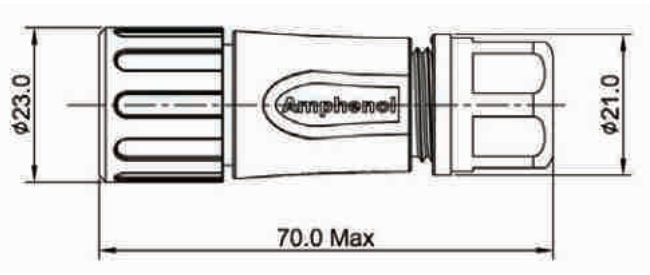

Male Figure 5 RTS6BS10N3P03

Plug

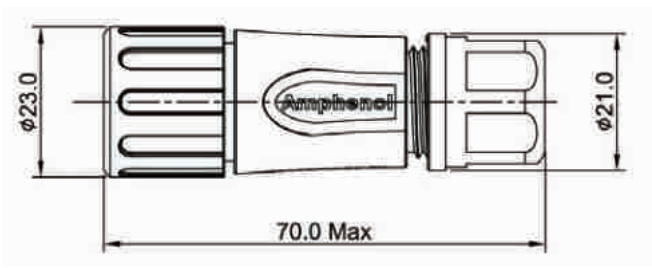

Female Figure 6 RTS6BS10N3S03

Accessories

Dust Cap for Receptacle, Size 10

RTS010DCG

Dust Cap for Plug, Size 10

RTS610NDCG

Sealing Plug, Size 16

A114017-SR

Coding Color Ring, Yellow, Size 10

RTS10CCRY

Coding Color Ring, Green, Size 10

RTS10CCRG

Coding Color Ring, Red, Size 10

RTS10CCRR

Shell Size: 10 **Number of Contacts: 3** **Contact Size: 16**
Sealing: IP67 / IP69k **Salt Spray: 500h**

Contacts Machined

Machined Contacts

Crimp Contacts, Machined

Part Number		AWG	Wire Range (mm²)	Plating
Male	Female			
MP14M23F	MS14M23F	14	2.0-2.5	Gold Flash
MP14M23G5	MS14M23G5	14	2.0-2.5	Gold 5µ"
MP14M23G10	MS14M23G10	14	2.0-2.5	Gold 10µ"
MP14M23G15	MS14M23G15	14	2.0-2.5	Gold 15µ"
MP14M23G30	MS14M23G30	14	2.0-2.5	Gold 30µ"
MP16M23F	MS16M23F	18-16	.75-1.5	Gold Flash
MP16M23G5	MS16M23G5	18-16	.75-1.5	Gold 5µ"
MP16M23G10	MS16M23G10	18-16	.75-1.5	Gold 10µ"
MP16M23G15	MS16M23G15	18-16	.75-1.5	Gold 15µ"
MP16M23G30	MS16M23G30	18-16	.75-1.5	Gold 30µ"
MP20M23F	MS20M23F	22-20	.34-.50	Gold Flash
MP20M23G5	MS20M23G5	22-20	.34-.50	Gold 5µ"
MP20M23G10	MS20M23G10	22-20	.34-.50	Gold 10µ"
MP20M23G15	MS20M23G15	22-20	.34-.50	Gold 15µ"
MP20M23G30	MS20M23G30	22-20	.34-.50	Gold 30µ"
MP24M23F	MS24M23F	26-24	.14-.25	Gold Flash
MP24M23G5	MS24M23G5	26-24	.14-.25	Gold 5µ"
MP24M23G10	MS24M23G10	26-24	.14-.25	Gold 10µ"
MP24M23G15	MS24M23G15	26-24	.14-.25	Gold 15µ"
MP24M23G30	MS24M23G30	26-24	.14-.25	Gold 30µ"

Tools

Contact Extraction Tool, #16 (Ø 1.6) Contact

QXRT16

Hand Crimp Tool for Machined Contacts

MFX-3959

Pneumatic Crimp Tool for Machined Contacts

MFX-3960

Shell Size: 10 **Number of Contacts:3** **Contact Size: 16**
Sealing: IP67 / IP69k **Salt Spray: 500h**

Contacts Stamped & Formed

Stamped & Formed Contacts

Crimp Contacts, Stamped & Formed

Part Number		AWG	Wire Range (mm²)	Plating
Male	Female			
SP14M2F	SS14M2F	14	2.0-2.5	Gold Flash
SP14M2G5	SS14M2G5	14	2.0-2.5	Gold 5µ"
SP14M2G10	SS14M2G10	14	2.0-2.5	Gold 10µ"
SP14M2G15	SS14M2G15	14	2.0-2.5	Gold 15µ"
SP14M2G30	SS14M2G30	14	2.0-2.5	Gold 30µ"
SP16M2F	SS16M2F	18-16	.75-1.5	Gold Flash
SP16M2G5	SS16M2G5	18-16	.75-1.5	Gold 5µ"
SP16M2G10	SS16M2G10	18-16	.75-1.5	Gold 10µ"
SP16M2G15	SS16M2G15	18-16	.75-1.5	Gold 15µ"
SP16M2G30	SS16M2G30	18-16	.75-1.5	Gold 30µ"
SP20M2F	SS20M2F	22-20	.34-.50	Gold Flash
SP20M2G5	SS20M2G5	22-20	.34-.50	Gold 5µ"
SP20M2G10	SS20M2G10	22-20	.34-.50	Gold 10µ"
SP20M2G15	SS20M2G15	22-20	.34-.50	Gold 15µ"
SP20M2G30	SS20M1G30	22-20	.34-.50	Gold 30µ"
SP24M2F	SS24M2F	26-24	.14-.25	Gold Flash
SP24M2G5	SS24M2G5	26-24	.14-.25	Gold 5µ"
SP24M2G10	SS24M2G10	26-24	.14-.25	Gold 10µ"
SP24M2G15	SS24M2G15	26-24	.14-.25	Gold 15µ"
SP24M2G30	SS24M2G30	26-24	.14-.25	Gold 30µ"

Tools

Contact Extraction Tool, #16 (Ø 1.6) Contact

QXRT16

Hand Tool, Stamped & Formed Contact, 16 AWG

MFX-3954

Crimp Die for Stamped & Formed Contact

MFX-3957

STEP 1
Choose Receptacle Style

STEP 2
Choose Plug Style

SEE TABLE ON NEXT PAGE FOR PART DETAILS

CONTACTS SOLD SEPARATELY SEE PAGE 32

Jam Nut Receptacles

RTS712N3P03

RTS712N3S03

RTS712N3PHEC03

Square Flange Receptacles

RTS012N3P03

RTS012N3S03

RTS012N3PHEC03

RTS012N3SHEC03

Plugs

RTS6BS12N3P03

RTS6BS12N3S03

RTS6BS12N3PHEC03

RTS6BS12N3SHEC03

Shell Size: 12 Number of Contacts: 3 Contact Size: 16
Sealing: IP67 / IP69k Salt Spray: 500h

eco|mate® Aquarius Standard Products

- Suitable For Indoor and Outdoor Applications
- EMI/RMI Shielding Capability with Appropriate Backshell
- Operating Temperature: -40°C to +125°C
- 500 Mating Cycles
- Contacts and Cord Grips Ordered Separately
- UL ECBT2 Certified*

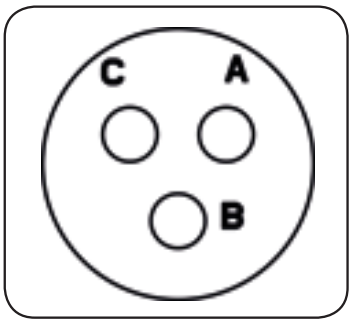

Insert Arrangement
Pin (Male) Faceview

Connector Part Numbers -Receptacles

PART NO#	Description	Temperature Range	Figure Drawing
RTS712N3P03	Receptacle, jam nut, 3 positions, size 12, pin contact , silicone rubber seal	-40 to 125°C	1
RTS712N3PHEC03	Receptacle, jam nut, 3 positions, size 12, pin contact , silicone rubber seal, endcap	-40 to 125°C	3
RTS712N3S03	Receptacle, jam nut, 3 positions, size 12, socket contact , silicone rubber seal	-40 to 125°C	2
RTS012N3P03	Receptacle, square flange, 3 positions, size 12, pin contact, silicone rubber seal	-40 to 125°C	4
RTS012N3PHEC03	Receptacle, square flange, 3 positions, size 12, pin contact, silicone rubber seal, endcap	-40 to 125°C	6
RTS012N3S03	Receptacle, square flange, 3 positions, size 12, socket contact, silicone rubber seal	-40 to 125°C	5
RTS012N3SHEC03	Receptacle, square flange, 3 positions, size 12, socket contact, silicone rubber seal, endcap	-40 to 125°C	7

Connector Part Numbers -Plugs

PART NO#	Description	Temperature Range	Figure Drawing
RTS6BS12N3P03	Straight plug with cord grip, 3 positions, size 12, pin contact , silicone rubber seal	-40 to 125°C	8
RTS6BS12N3PHEC03	Straight plug with end cap, 3 positions, size 12, pin contact , silicone rubber seal	-40 to 125°C	10
RTS6BS12N3S03	Straight plug with cord grip, 3 positions, size 12, socket contact , silicone rubber seal	-40 to 125°C	9
RTS6BS12N3SHEC03	Straight plug with end cap, 3 positions, size 12, socket contact , silicone rubber seal	-40 to 125°C	11

Contacts supplied separately see page 32

Shell Size: 12 **Number of Contacts: 3** **Contact Size: 16**
Sealing: IP67 / IP69k **Salt Spray: 500h**

Dimensions Jam Nut Receptacle

Jam Nut Receptacle

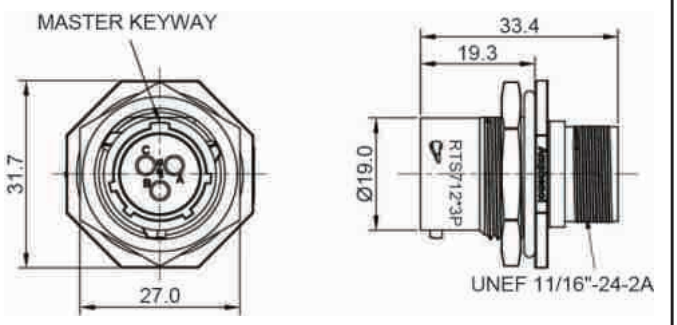

Male Figure 1 RTS712N3P03

Jam Nut Receptacle

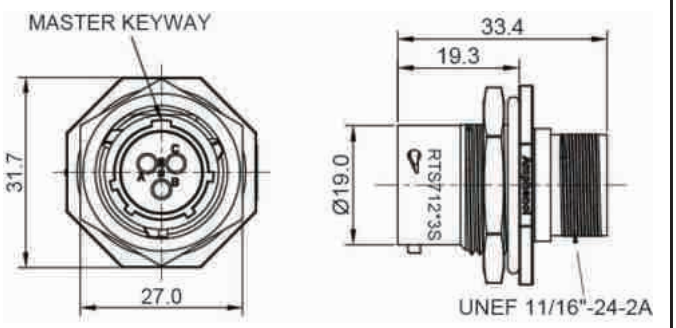

Female Figure 2 RTS712N3S03

Jam Nut Receptacle with Endcap

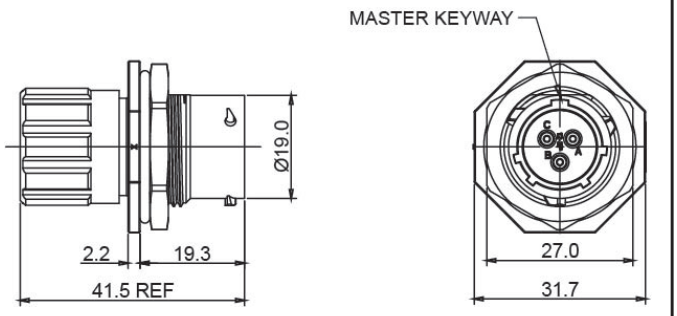

Male Figure 3 RTS712N3PHEC03

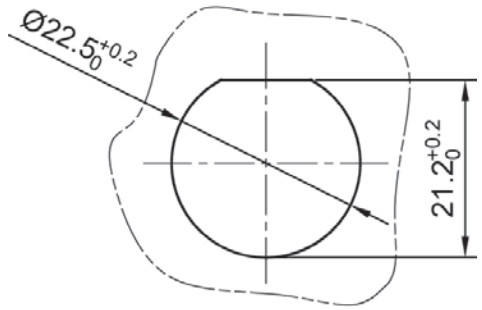

MOUNTING HOLE

Shell Size: 12 Number of Contacts: 3 Contact Size: 16
Sealing: IP67 / IP69k Salt Spray: 500h

Dimensions Square Flange Receptacle

Square Flange Receptacle

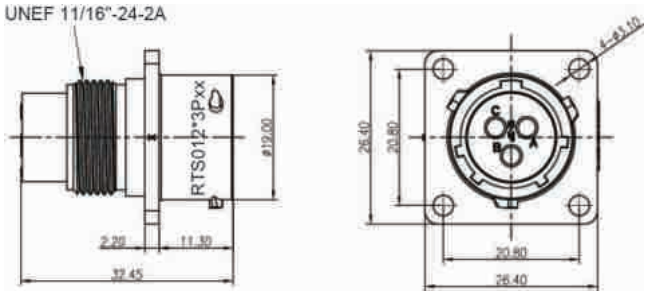

Male Figure 4 RTS012N3P03

Square Flange Receptacle

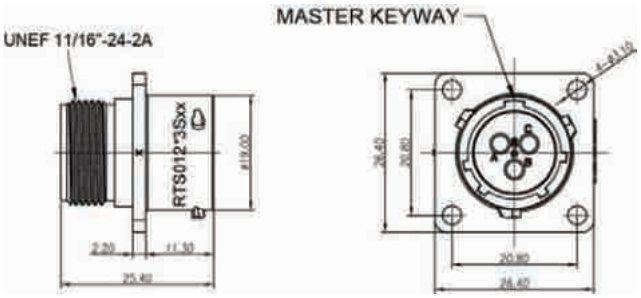

Female Figure 5 RTS012N3S03

Square Flange Receptacle with Endcap

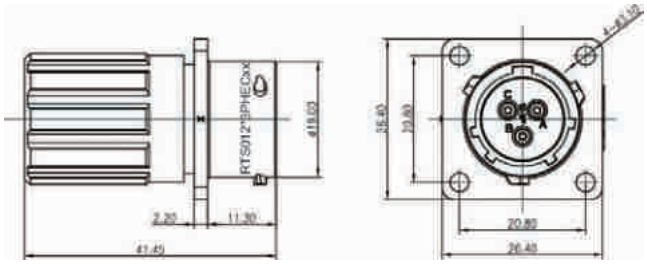

Male Figure 6 RTS012N3PHEC03

Square Flange Receptacle with Endcap

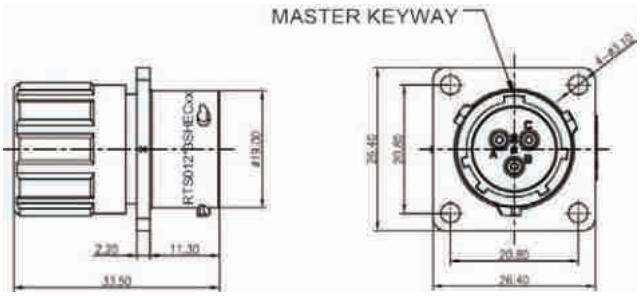

Female Figure 7 RTS012N3SHEC03

Shell Size: 12 **Number of Contacts: 3** **Contact Size: 16**
Sealing: IP67 / IP69k **Salt Spray: 500h**

Dimensions Plug

Plug

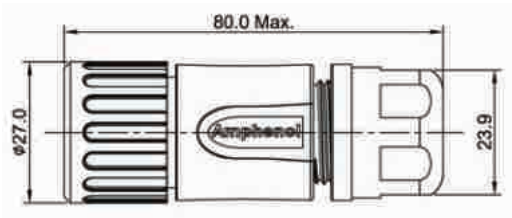

Male Figure 8 RTS6BS12N3P03

Plug

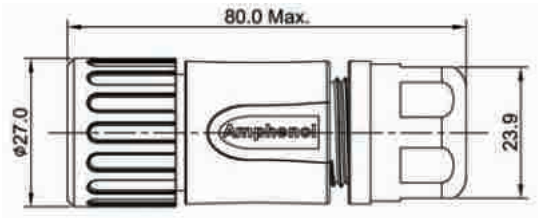

Female Figure 9 RTS6BS12N3S03

Plug with Endcap

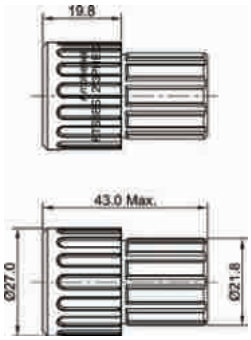

Male Figure 10 RTS6BS12N3PHEC03

Plug with Endcap

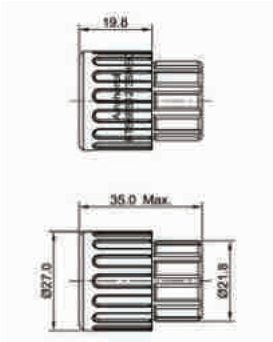

Female Figure 11 RTS6BS12N3SHEC03

Shell Size: 12 Number of Contacts: 3 Contact Size: 16
Sealing: IP67 / IP69k Salt Spray: 500h

Accessories

Dust Cap for Receptacle, Size 12

RTS012DCG

Dust Cap for Plug, Size 12

RTS612NDCG

Sealing Plug, Size 16

A114017-SR

Coding Color Ring, Yellow, Size 12

RTS12CCRY

Coding Color Ring, Green, Size 12

RTS12CCRG

Coding Color Ring, Red, Size 12

RTS12CCRR

Shell Size: 12 **Number of Contacts: 3** **Contact Size: 16**
Sealing: IP67 / IP69k **Salt Spray: 500h**

Contacts Machined

Machined Contacts

Crimp Contacts, Machined

Part Number		AWG	Wire Range (mm²)	Plating
Male	Female			
MP14M23F	MS14M23F	14	2.0-2.5	Gold Flash
MP14M23G5	MS14M23G5	14	2.0-2.5	Gold 5µ"
MP14M23G10	MS14M23G10	14	2.0-2.5	Gold 10µ"
MP14M23G15	MS14M23G15	14	2.0-2.5	Gold 15µ"
MP14M23G30	MS14M23G30	14	2.0-2.5	Gold 30µ"
MP16M23F	MS16M23F	18-16	.75-1.5	Gold Flash
MP16M23G5	MS16M23G5	18-16	.75-1.5	Gold 5µ"
MP16M23G10	MS16M23G10	18-16	.75-1.5	Gold 10µ"
MP16M23G15	MS16M23G15	18-16	.75-1.5	Gold 15µ"
MP16M23G30	MS16M23G30	18-16	.75-1.5	Gold 30µ"
MP20M23F	MS20M23F	22-20	.34-.50	Gold Flash
MP20M23G5	MS20M23G5	22-20	.34-.50	Gold 5µ"
MP20M23G10	MS20M23G10	22-20	.34-.50	Gold 10µ"
MP20M23G15	MS20M23G15	22-20	.34-.50	Gold 15µ"
MP20M23G30	MS20M23G30	22-20	.34-.50	Gold 30µ"
MP24M23F	MS24M23F	26-24	.14-.25	Gold Flash
MP24M23G5	MS24M23G5	26-24	.14-.25	Gold 5µ"
MP24M23G10	MS24M23G10	26-24	.14-.25	Gold 10µ"
MP24M23G15	MS24M23G15	26-24	.14-.25	Gold 15µ"
MP24M23G30	MS24M23G30	26-24	.14-.25	Gold 30µ"

Tools

Contact Extraction Tool, #16 (Ø 1.6) Contact

QXRT16

Hand Crimp Tool for Machined Contacts

MFX-3959

Pneumatic Crimp Tool for Machined Contacts

MFX-3960

Shell Size: 12 **Number of Contacts: 3** **Contact Size: 16**
Sealing: IP67 / IP69k **Salt Spray: 500h**

Contacts Stamped & Formed

Stamped & Formed Contacts

Crimp Contacts, Stamped & Formed

Part Number		AWG	Wire Range (mm²)	Plating
Male	Female			
SP14M2F	SS14M2F	14	2.0-2.5	Gold Flash
SP14M2G5	SS14M2G5	14	2.0-2.5	Gold 5µ"
SP14M2G10	SS14M2G10	14	2.0-2.5	Gold 10µ"
SP14M2G15	SS14M2G15	14	2.0-2.5	Gold 15µ"
SP14M2G30	SS14M2G30	14	2.0-2.5	Gold 30µ"
SP16M2F	SS16M2F	18-16	.75-1.5	Gold Flash
SP16M2G5	SS16M2G5	18-16	.75-1.5	Gold 5µ"
SP16M2G10	SS16M2G10	18-16	.75-1.5	Gold 10µ"
SP16M2G15	SS16M2G15	18-16	.75-1.5	Gold 15µ"
SP16M2G30	SS16M2G30	18-16	.75-1.5	Gold 30µ"
SP20M2F	SS20M2F	22-20	.34-.50	Gold Flash
SP20M2G5	SS20M2G5	22-20	.34-.50	Gold 5µ"
SP20M2G10	SS20M2G10	22-20	.34-.50	Gold 10µ"
SP20M2G15	SS20M2G15	22-20	.34-.50	Gold 15µ"
SP20M2G30	SS20M1G30	22-20	.34-.50	Gold 30µ"
SP24M2F	SS24M2F	26-24	.14-.25	Gold Flash
SP24M2G5	SS24M2G5	26-24	.14-.25	Gold 5µ"
SP24M2G10	SS24M2G10	26-24	.14-.25	Gold 10µ"
SP24M2G15	SS24M2G15	26-24	.14-.25	Gold 15µ"
SP24M2G30	SS24M2G30	26-24	.14-.25	Gold 30µ"

Tools

Contact Extraction Tool, #16 (Ø 1.6) Contact

QXRT16

Hand Tool, Stamped & Formed Contact, Size 16 20-14AWG

MFX-3954

Crimp Die for Stamped & Formed Contact

MFX-3957

STEP 1
Choose Receptacle Style

STEP 2
Choose Plug Style

Jam Nut Receptacles

RTS714N3P03

RTS714N3S03

Plugs

RTS6BS14N3P03

RTS6BS14N3S03

Square Flange Receptacles

RTS014N3P03

RTS014N3S03

SEE TABLE ON NEXT PAGE FOR PART DETAILS

CONTACTS SOLD SEPARATELY SEE PAGE 39

Shell Size: 14 Number of Contacts: 3 Contact Size: 3.6mm
Sealing: IP67 / IP69k Salt Spray: 500h

eco|mate® Aquarius Standard Products

- Suitable For Indoor and Outdoor Applications
- EMI/RMI Shielding Capability with Appropriate Backshell
- Operating Temperature: -40°C to +125°C
- 500 Mating Cycles
- Contacts and Cord Grips Ordered Separately
- UL ECBT2 Certified*

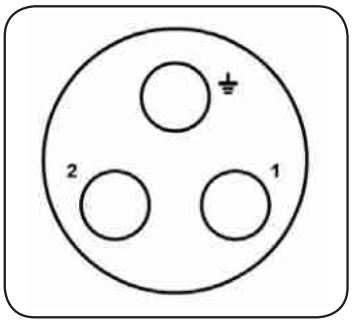

Insert Arrangement
Pin (Male) Faceview

Connector Part Numbers - Receptacles

PART NO#	Description	Temperature Range	Figure Drawing
RTS714N3P03	Receptacle, jam nut, 3 positions, size 14, pin contact, silicone rubber seal	-40 to 125°C	1
RTS714N3S03	Receptacle, jam nut, 3 positions, size 14, socket contact, silicone rubber seal	-40 to 125°C	2
RTS014N3P03	Receptacle, square flange, 3 positions, size 14, pin contact, silicone rubber seal	-40 to 125°C	3
RTS014N3S03	Receptacle, square flange, 3 positions, size 14, socket contact, silicone rubber seal	-40 to 125°C	4

Connector Part Numbers - Plugs

PART NO#	Description	Temperature Range	Figure Drawing
RTS6BS14N3P03	Straight plug with cord grip, 3 positions, size 14, pin contact, silicone rubber seal	-40 to 125°C	5
RTS6BS14N3S03	Straight plug with cord grip, 3 positions, size 14, socket contact, silicone rubber seal	-40 to 125°C	6

Contacts supplied separately see page 39

Shell Size: 14 Number of Contacts: 3 Contact Size: 8
Sealing: IP67 / IP69k Salt Spray: 500h

Dimensions Jam Nut and Square Flange Receptacles

Jam Nut Receptacle

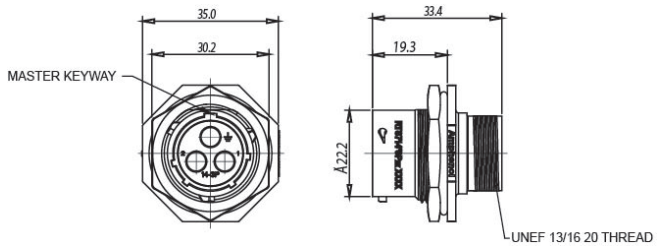

Male Figure 1 RTS714N3P03

Jam Nut Receptacle

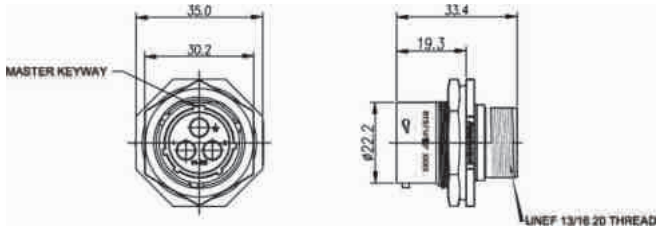

Female Figure 2 RTS714N3S03

Sqaure Flange Receptacle

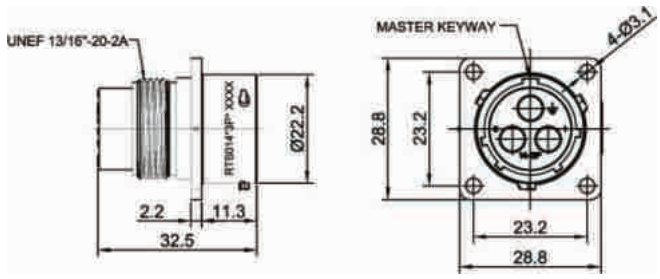

Male Figure 3 RTS014N3P03

Sqaure Flange Receptacle

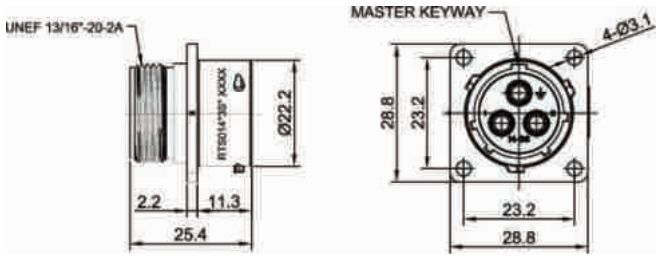

Female Figure 4 RTS014N3S03

Shell Size: 14 **Number of Contacts: 3** **Contact Size: 3.6mm**
Sealing: IP67 / IP69k **Salt Spray: 500h**

Dimensions Plugs

Plug

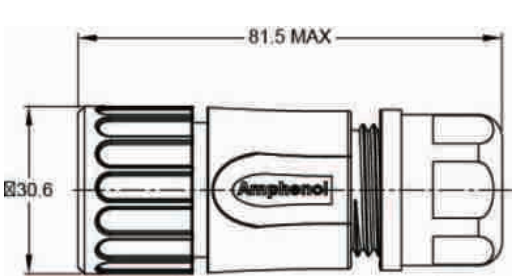

Male Figure 5 RTS6BS14N3P03

Plug

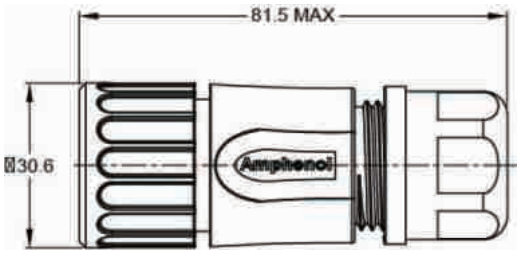

Female Figure 6 RTS6BS14N3S03

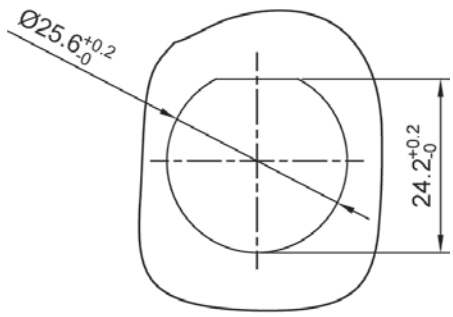

PANEL CUTOUT REFERENCE
THICKNESS:3.2MM (MAX)

Shell Size: 14 Number of Contacts: 3 Contact Size: 8
Sealing: IP67 / IP69k Salt Spray: 500h

Accessories

Dust Cap for Receptacle, Size 14

RTS014DCG

Dust Cap for Plug, Size 14

RTS614NDCG

Coding Color Ring, Yellow, Size 14

RTS14CCRY

Coding Color Ring, Green, Size 14

RTS14CCRG

Coding Color Ring, Red, Size 14

RTS14CCRR

Shell Size: 14 **Number of Contacts: 3** **Contact Size: 3.6mm**
Sealing: IP67 / IP69k **Salt Spray: 500h**

Contacts

Crimp Contacts, Machined

Part Number		AWG	Wire Range (mm²)	Plating
Male	Female			
MP10A23S	MS10A23S	8	3.0-6.0	Silver Plated

no stamped & formed contacts are available for this groupt

Tools

Extraction Tool 3.6mm Contact

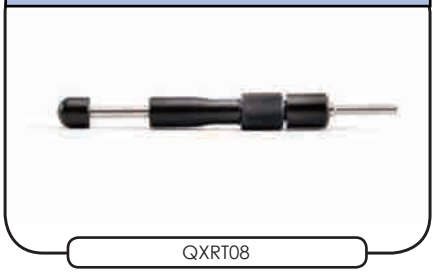

QXRT08

Extraction Tool (for eco | mate® rm with Radsok) 3.6mm Contact

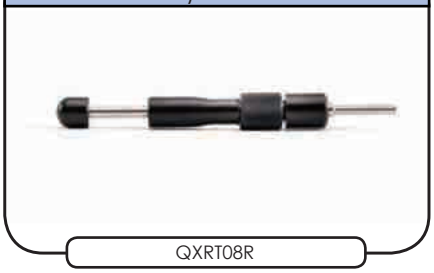

QXRT08R

STEP 1 Choose Receptacle Style	STEP 2 Choose Plug Style

Jam Nut Receptacles

RTS78N4P

RTS78N4S

Plugs

RTS6BS8N4P

RTS6BS8N4S

Jam Nut Receptacles

RTS08N4P

RTS08N4S

SEE TABLE ON NEXT PAGE FOR PART DETAILS

CONTACTS SOLD SEPARATELY SEE PAGE 44

Shell Size: 8 Number of Contacts: 4 Contact Size: 20
Sealing: IP67 / IP69k Salt Spray: 500h

eco|mate® Aquarius Standard Products

- Suitable For Indoor and Outdoor Applications
- EMI/RMI Shielding Capability with Appropriate Backshell
- Operating Temperature: -40°C to +105°C
- 500 Mating Cycles
- Contacts and Cord Grips Ordered Separately
- UL ECBT2 Certified*

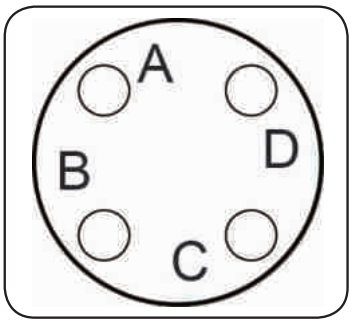

Insert Arrangement
Pin (Male) Faceview

Connector Part Numbers - Receptacles

PART NO#	Description	Temperature Range	Figure Drawing
RTS78N4P	Receptacle, jam nut, 4 positions, size 8, pin contact, NBR seal	-40 to 105°C	1
RTS78N4S	Receptacle, jam nut, 4 positions, size 8, socket contact, NBR seal	-40 to 105°C	2
RTS08N4P	Receptacle, square flange, 3 positions, size 8, pin contact , NBR Seal	-40C to 105C	3
RTS08N4S	Receptacle, square flange, 3 positions, size 8, socket contact , NBR Seal	-40C to 105C	4

Connector Part Numbers - Plugs

PART NO#	Description	Temperature Range	Figure Drawing
RTS6BS8N4P	Straight plug with cord grip, 4 positions, size 8, pin contact, NBR seal	-40 to 105°C	5
RTS6BS8N4S	Straight plug with cord grip, 4 positions, size 8, socket contact, NBR seal	-40 to 105°C	6

Contacts supplied separately see page 44

Shell Size: 8 Number of Contacts: 4 Contact Size: 20
Sealing: IP67 / IP69k Salt Spray: 500h

Dimensions Receptacles/ Plugs

Jam Nut Receptacle

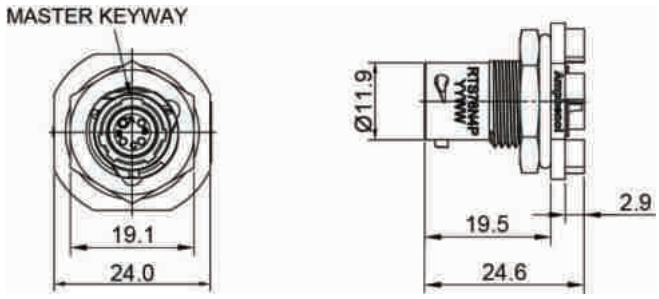

Male Figure 1 RTS78N4P

Jam Nut Receptacle

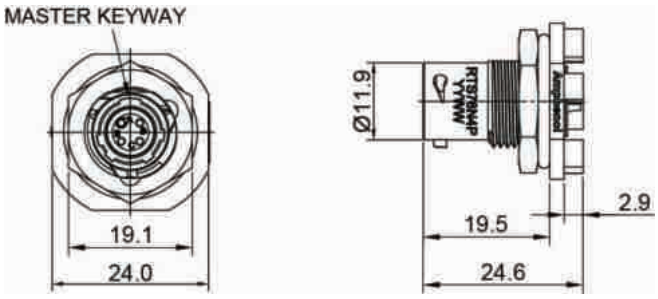

Female Figure 2 RTS78N4S

Square Flange Receptacle

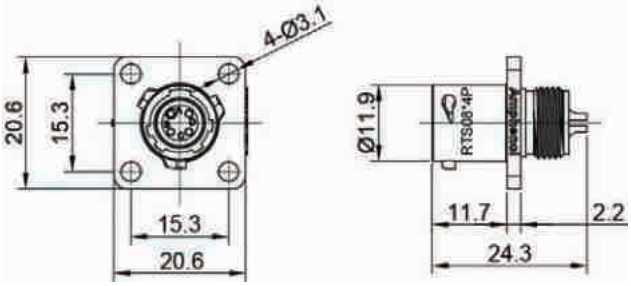

Male Figure 3 RTS08N4P

Square Flange Receptacle

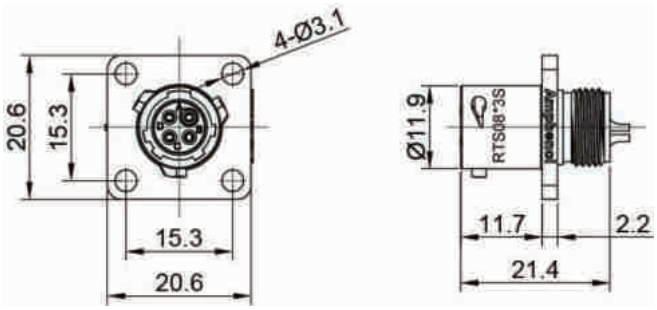

Female Figure 4 RTS08N4S

Plug

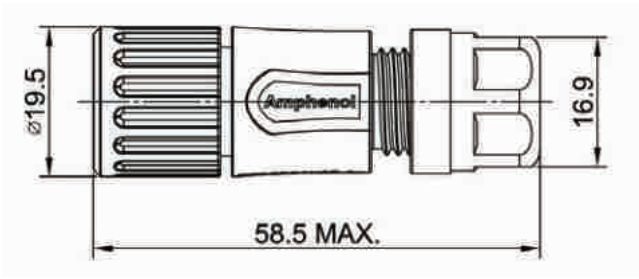

Male Figure 5 RTS6BS8N4P

Plug

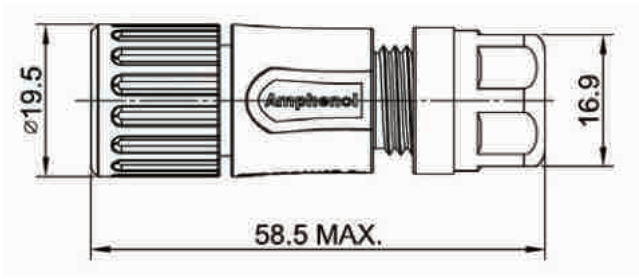

Female Figure 6 RTS6BS8N4S

Shell Size: 8 Number of Contacts: 4 Contact Size: 20
Sealing: IP67 / IP69k Salt Spray: 500h

Accessories

Coding Color Ring, Yellow, Size 8

RTS8CCRY

Coding Color Ring, Green, Size 8

RTS8CCRG

Coding Color ring, Red, Size 8

RTS8CCRR

Sealing Plug, Size 20

AT13-204-2005

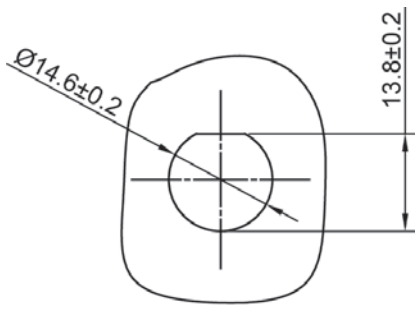

PANEL CUT OUT REFERENCE
PANEL THICKNESS : 3.2MM MAX.

Shell Size: 8 **Number of Contacts: 4** **Contact Size: 20**
Sealing: IP67 / IP69k **Salt Spray: 500h**

Contacts Machined

Machined Contacts

Crimp Contacts, Machined

Part Number		AWG	Wire Ranget (mm²)	Plating
Male	Female			
MP20W23F	MS20W23F	22-20	.34-.50	Gold Flash
MP20W23G5	MS20W23G5	22-20	.34-.50	Gold 5µ"
MP20W23G10	MS20W23G10	22-20	.34-.50	Gold 10µ"
MP20W23G15	MS20W23G15	22-20	.34-.50	Gold 15µ"
MP20W23G30	MS20W23G30	22-20	.34-.50	Gold 30µ"
MP24W23F	MS24W23F	26-24	.13-.25	Gold Flash
MP24W23G5	MS24W23G5	26-24	.13-.25	Gold 5µ"
MP24W23G10	MS24W23G10	26-24	.13-.25	Gold 10µ"
MP24W23G15	MS24W23G15	26-24	.13-.25	Gold 15µ"
MP24W23G30	MS24W23G30	26-24	.13-.25	Gold 30µ"
MP28W23F	MS28W23F	30-28	.05-.08	Gold Flash
MP28W23G5	MS28W23G5	30-28	.05-.08	Gold 5µ"
MP28W23G10	MS28W23G10	30-28	.05-.08	Gold 10µ"
MP28W23G15	MS28W23G15	30-28	.05-.08	Gold 15µ"
MP28W23G30	MS28W23G30	30-28	.05-.08	Gold 30µ"

Tools

Contact Extraction Tool, #20 (Ø 1.6) Contact

QXRT20

Hand Crimp Tool for Machined Contacts

MFX-3959

Pneumatic Crimp Tool for Machined Contact

MFX-3960

Shell Size: 8 **Number of Contacts: 4** **Contact Size: 20**
Sealing: IP67 / IP69k **Salt Spray: 500h**

Contacts Stamped & Formed

Stamped & Formed Contacts

Crimp Contacts, Stamped & Formed

Part Number		AWG	Wire Range (mm²)	Plating
Male	Female			
SP20W2F	SS20W2F	22-20	.34-.50	Gold Flash
SP20W2G5	SS20W2G5	22-20	.34-.50	Gold 5µ"
SP20W2G10	SS20W2G10	22-20	.34-.50	Gold 10µ"
SP20W2G15	SS20W2G15	22-20	.34-.50	Gold 15µ"
SP20W2G30	SS20W2G30	22-20	.34-.50	Gold 30µ"
SP24W2F	SS24W2F	26-24	.14-.25	Gold Flash
SP24W2G5	SS24W2G5	26-24	.14-.25	Gold 5µ"
SP24W2G10	SS24W2G10	26-24	.14-.25	Gold 10µ"
SP24W2G15	SS24W2G15	26-24	.14-.25	Gold 15µ"
SP24W2G30	SS24W2G30	26-24	.14-.25	Gold 30µ"
SP28W2F	SS28W2F	30-28	.05-.08	Gold Flash
SP28W2G5	SS28W2G5	30-28	.05-.08	Gold 5µ"
SP28W2G10	SS28W2G10	30-28	.05-.08	Gold 10µ"
SP28W2G15	SS28W2G15	30-28	.05-.08	Gold 15µ"
SP28W2G30	SS28W2G30	30-28	.05-.08	Gold 30µ"

Tools

Contact Extraction Tool, #20 (Ø 1.6) Contact

QXRT20

Hand Tool, Stamped & Formed Contact, Size 20 20-14AWG

MFX-3958

Crimp Die for Stamped & Formed Contact

MFX-3957

STEP 1
Choose Receptacle Style

STEP 2
Choose Plug Style

SEE TABLE ON NEXT PAGE FOR PART DETAILS

CONTACTS SOLD SEPARATELY SEE PAGE 52

Jam Nut Receptacles

RTS710N4P03

RTS710N4S03

RTS710N4PHEC03

Square Flange Receptacles

RTS010N4P03

RTS010N4S03

RTS010N4PHEC03

RTS010N4SHEC03

Plug

RTS6BS10N4P03

RTS6BS10N4S03

RTS6BS10N4SHEC03

RTS6BS10N4PHEC03

Shell Size: 10 Number of Contacts: 4 Contact Size: 16
Sealing: IP67 / IP69k Salt Spray: 500h

eco|mate® Aquarius Standard Products

- Suitable For Indoor and Outdoor Applications
- EMI/RMI Shielding Capability with Appropriate Backshell
- Operating Temperature: -40°C to +125°C
- 500 Mating Cycles
- Contacts and Cord Grips Ordered Separately
- UL ECBT2 Certified*

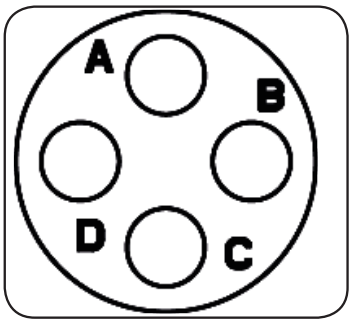

Insert Arrangement
Pin (Male) Faceview

Connector Part Numbers - Receptacles

PART NO#	Description	Temperature Range	Figure Drawing
RTS710N4P03	Receptacle, jam nut, 4 positions, size 10, pin contact , silicone rubber seal	-40C to 125C	1
RTS710N4S03	Receptacle, jam nut, 4 positions, size 10, socket contact , silicone rubber seal	-40C to 125C	2
RTS710N4PHEC03	Receptacle, jam nut, 4 positions, size 10, pin contact , silicone rubber seal, endcap	-40C to 125C	3
RTS010N4P03	Receptacle, square flange, 4 positions, size 10, pin contact, silicone rubber seal	-40C to 125C	4
RTS010N4PHEC03	Receptacle, square flange, 4 positions, size 10, pin contact, silicone rubber seal, endcap	-40C to 125C	6
RTS010N4S03	Receptacle, square flange, 4 positions, size 10, socket contact, silicone rubber seal	-40C to 125C	5
RTS010N4SHEC03	Receptacle, square flange, 4 positions, size 10, socket contact, silicone rubber seal,endcap	-40C to 125C	7

Connector Part Numbers - Plugs

PART NO#	Description	Temperature Range	Figure Drawing
RTS6BS10N4P03	Straight plug with cord grip, 4 positions, size 10, pin contact , silicone rubber seal	-40C to 125C	8
RTS6BS10N4PHEC03	Straight plug with endcap, 4 positions, size 10, pin contact , silicone rubber seal	-40C to 125C	10
RTS6BS10N4S03	Straight plug with cord grip, 4 positions, size 10, socket contact , silicone rubber seal	-40C to 125C	9
RTS6BS10N4SHEC03	Straight plug with endcap, 4 positions, size 10, socket contact , silicone rubber seal	-40C to 125C	11

Contacts supplied separately see page 52

Shell Size: 10 **Number of Contacts: 4** **Contact Size: 16**
Sealing: IP67 / IP69k **Salt Spray: 500h**

Dimensions Jam Nut Receptacle

Jam Nut Receptacle

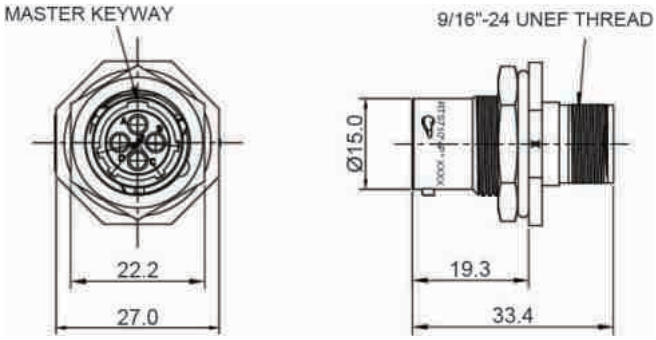

Male Figure 1 RTS710N4P03

Jam Nut Receptacle

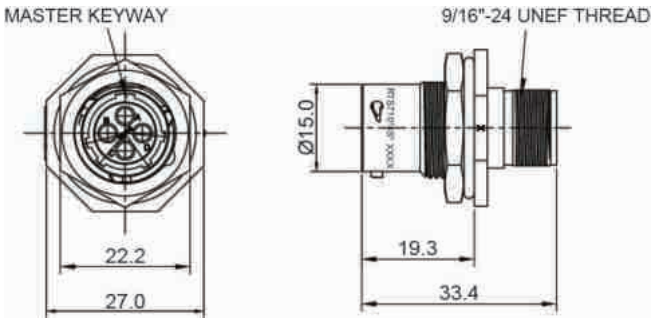

Female Figure 2 RTS710N4S03

Jam Nut Receptacle with Endcap

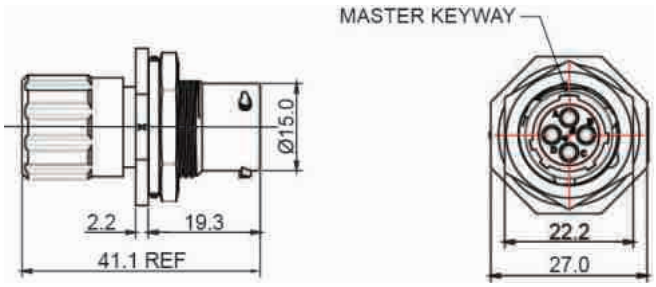

Male Figure 3 RTS710N4PHEC03

Shell Size: 10 **Number of Contacts: 4** **Contact Size: 16**
Sealing: IP67 / IP69k **Salt Spray: 500h**

Dimensions Square Flange Receptacle

Square Flanget Receptacle

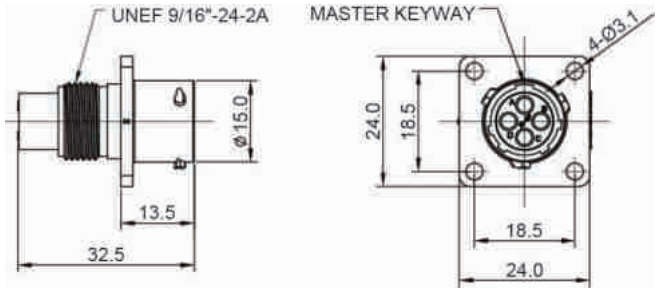

Male Figure 4 RTS010N4P03

Square Flange Receptacle

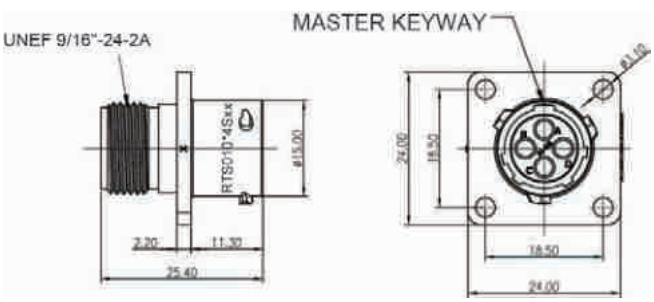

Female Figure 5 RTS010N4S03

Square Flanget Receptacle with Endcap

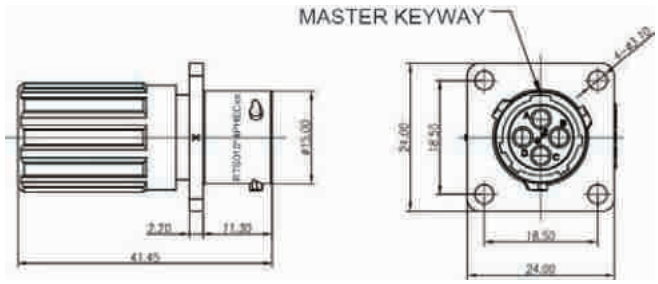

Male Figure 6 RTS010N4PHEC03

Square Flange Receptacle with Endcap

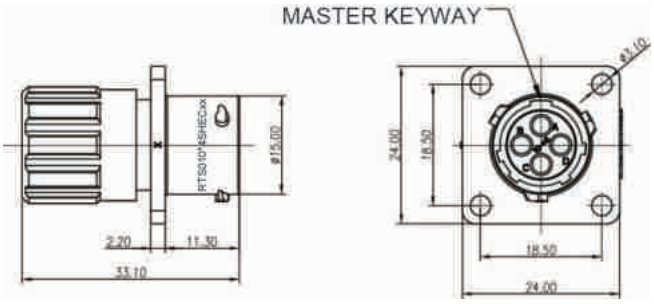

Female Figure 7 RTS010N4SHEC03

Shell Size: 10 Number of Contacts: 4 Contact Size: 16
Sealing: IP67 / IP69k Salt Spray: 500h

Dimensions Plug

Plug

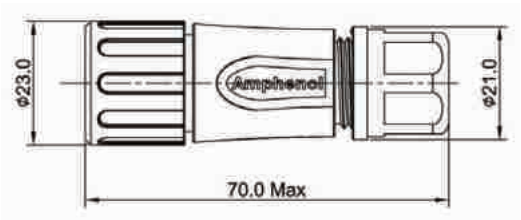

Male Figure 8 RTS6BS10N4P03

Plug

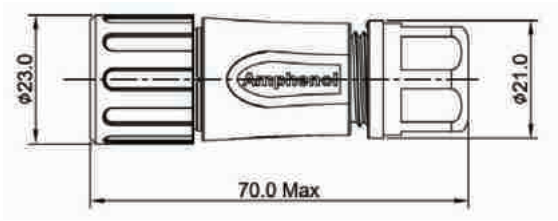

Female Figure 9 RTS6BS10N4S03

Plug with Endcap

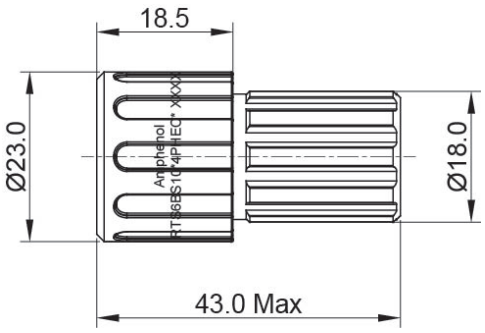

Male Figure 10 RTS6BS10N4PHEC03

Plug with Endcap

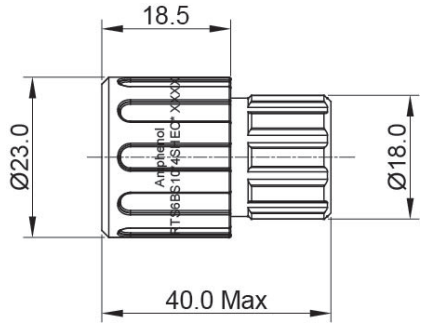

Female Figure 11 RTS6BS10N4SHEC03

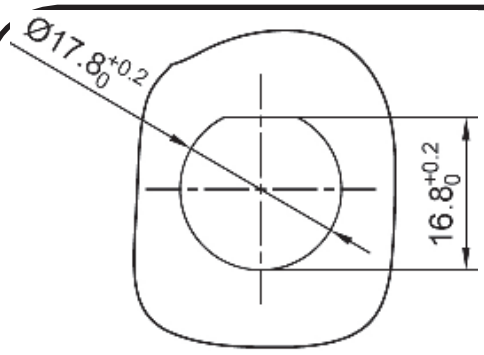

PANEL CUT OUT REFERENCE

Shell Size: 10 Number of Contacts: 4 Contact Size: 16
Sealing: IP67 / IP69k Salt Spray: 500h

Accessories

Dust Cap for Receptacle, Size 10

RTS010DCG

Dust Cap for Plug, Size 10

RTS610NDCG

Sealing Plug, Size 16

A114017-SR

Coding Color Ring, Yellow, Size 10

RTS10CCRY

Coding Color Ring, Green, Size 10

RTS10CCRG

Coding Color Ring, Red, Size 10

RTS10CCRR

Shell Size: 10 **Number of Contacts: 4** **Contact Size: 16**
Sealing: IP67 / IP69k **Salt Spray: 500h**

Contacts Machined

Machined Contacts

Crimp Contacts, Machined

Part Number		AWG	Wire Range (mm²)	Plating
Male	Female			
MP14M23F	MS14M23F	14	2.0-2.5	Gold Flash
MP14M23G5	MS14M23G5	14	2.0-2.5	Gold 5µ"
MP14M23G10	MS14M23G10	14	2.0-2.5	Gold 10µ"
MP14M23G15	MS14M23G15	14	2.0-2.5	Gold 15µ"
MP14M23G30	MS14M23G30	14	2.0-2.5	Gold 30µ"
MP16M23F	MS16M23F	18-16	.75-1.5	Gold Flash
MP16M23G5	MS16M23G5	18-16	.75-1.5	Gold 5µ"
MP16M23G10	MS16M23G10	18-16	.75-1.5	Gold 10µ"
MP16M23G15	MS16M23G15	18-16	.75-1.5	Gold 15µ"
MP16M23G30	MS16M23G30	18-16	.75-1.5	Gold 30µ"
MP20M23F	MS20M23F	22-20	.34-.50	Gold Flash
MP20M23G5	MS20M23G5	22-20	.34-.50	Gold 5µ"
MP20M23G10	MS20M23G10	22-20	.34-.50	Gold 10µ"
MP20M23G15	MS20M23G15	22-20	.34-.50	Gold 15µ"
MP20M23G30	MS20M23G30	22-20	.34-.50	Gold 30µ"
MP24M23F	MS24M23F	26-24	.14-.25	Gold Flash
MP24M23G5	MS24M23G5	26-24	.14-.25	Gold 5µ"
MP24M23G10	MS24M23G10	26-24	.14-.25	Gold 10µ"
MP24M23G15	MS24M23G15	26-24	.14-.25	Gold 15µ"
MP24M23G30	MS24M23G30	26-24	.14-.25	Gold 30µ"

Tools

Contact Extraction Tool, #16 (Ø 1.6) Contact

QXRT16

Hand Crimp Tool for Machined Contacts

MFX-3959

Pneumatic Crimp Tool for Machined Contacts

MFX-3960

Shell Size: 10 **Number of Contacts: 4** **Contact Size: 16**
Sealing: IP67 / IP69k **Salt Spray: 500h**

Contacts Stamped & Formed

Stamped & Formed Contacts

Crimp Contacts, Stamped & Formed

Part Number		AWG	Wire Range (mm²)	Plating
Male	Female			
SP14M2F	SS14M2F	14	2.0-2.5	Gold Flash
SP14M2G5	SS14M2G5	14	2.0-2.5	Gold 5µ"
SP14M2G10	SS14M2G10	14	2.0-2.5	Gold 10µ"
SP14M2G15	SS14M2G15	14	2.0-2.5	Gold 15µ"
SP14M2G30	SS14M2G30	14	2.0-2.5	Gold 30µ"
SP16M2F	SS16M2F	18-16	.75-1.5	Gold Flash
SP16M2G5	SS16M2G5	18-16	.75-1.5	Gold 5µ"
SP16M2G10	SS16M2G10	18-16	.75-1.5	Gold 10µ"
SP16M2G15	SS16M2G15	18-16	.75-1.5	Gold 15µ"
SP16M2G30	SS16M2G30	18-16	.75-1.5	Gold 30µ"
SP20M2F	SS20M2F	22-20	.34-.50	Gold Flash
SP20M2G5	SS20M2G5	22-20	.34-.50	Gold 5µ"
SP20M2G10	SS20M2G10	22-20	.34-.50	Gold 10µ"
SP20M2G15	SS20M2G15	22-20	.34-.50	Gold 15µ"
SP20M2G30	SS20M1G30	22-20	.34-.50	Gold 30µ"
SP24M2F	SS24M2F	26-24	.14-.25	Gold Flash
SP24M2G5	SS24M2G5	26-24	.14-.25	Gold 5µ"
SP24M2G10	SS24M2G10	26-24	.14-.25	Gold 10µ"
SP24M2G15	SS24M2G15	26-24	.14-.25	Gold 15µ"
SP24M2G30	SS24M2G30	26-24	.14-.25	Gold 30µ"

Tools

Contact Extraction Tool, #16 (Ø 1.6) Contact

QXRT16

Hand Tool, Stamped & Formed Contact, Size 16 20-14AWG

MFX-3954

Crimp Die for Stamped & Formed Contact

MFX-3957

STEP 1
Choose Receptacle Style

STEP 2
Choose Plug Style

Jam Nut Receptacles

RTS712N4P03

RTS712N4S03

Plug

RTS6BS12N4P03

RTS6BS12N4S03

Square Flange Receptacles

RTS012N4P03

RTS012N4S03

SEE TABLE ON NEXT PAGE FOR PART DETAILS

CONTACTS SOLD SEPARATELY SEE PAGE 58

Shell Size: 12 Number of Contacts: 4 Contact Size: 16
Sealing: IP67 / IP69k Salt Spray: 500h

eco|mate® Aquarius Standard Products

- Suitable For Indoor and Outdoor Applications
- EMI/RMI Shielding Capability with Appropriate Backshell
- Operating Temperature: -40°C to +125°C
- 500 Mating Cycles
- Contacts and Cord Grips Ordered Separately
- UL ECBT2 Certified*

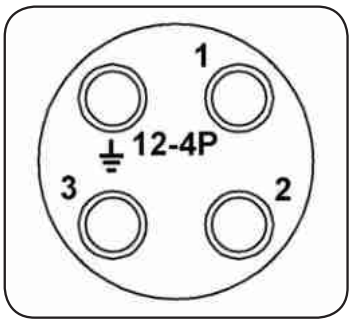

Insert Arrangement
Pin (Male) Faceview

Connector Part Numbers - Receptacles

PART NO#	Description	Temperature Range	Figure Drawing
RTS712N4P03	Receptacle, jam nut, 4 positions, size 12, pin contact, silicone rubber seal	-40 to 125°C	1
RTS712N4S03	Receptacle, jam nut, 4 positions, size 12, socket contact, silicone rubber seal	-40 to 125°C	2
RTS012N4P03	Receptacle, square flange, 4 positions, size 12, pin contact, silicone rubber seal	-40 to 125°C	3
RTS012N4S03	Receptacle, square flange, 4 positions, size 12, socket contact, silicone rubber seal	-40 to 125°C	4

Connector Part Numbers - Plugs

PART NO#	Description	Temperature Range	Figure Drawing
RTS6BS12N4P03	Straight plug with cord grip, 4 positions, size 12, pin contact, silicone rubber seal	-40 to 125°C	5
RTS6BS12N4S03	Straight plug with cord grip, 4 positions, size 12, socket contact, silicone rubber seal	-40 to 125°C	6

Contacts supplied separately see page 58

Shell Size: 12 Number of Contacts: 4 Contact Size: 16
Sealing: IP67 / IP69k Salt Spray: 500h

Dimensions Jam Nut/ Sqaure Flange Receptacles

Jam Nut Receptacle

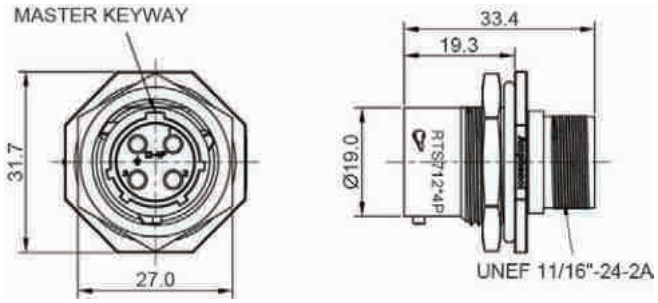

Male Figure 1 RTS712N4P03

Jam Nut Receptacle

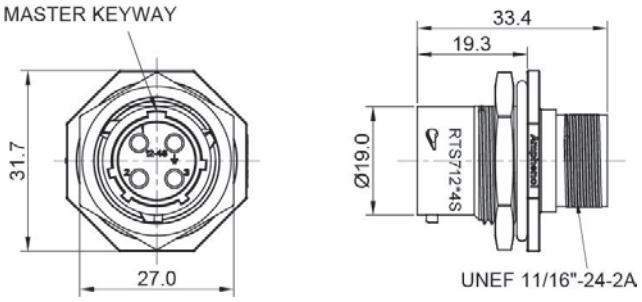

Female Figure 2 RTS712N4S03

Square Flange Receptacle

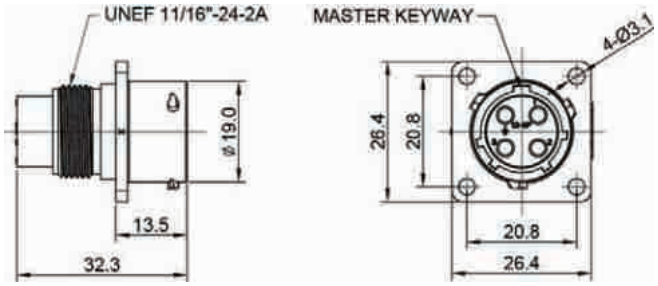

Male Figure 3 RTS012N4P03

Square Flange Receptacle

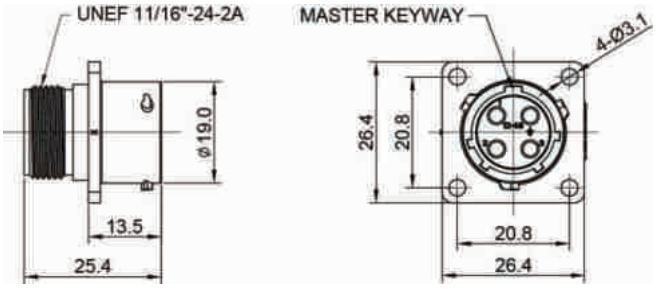

Female Figure 4 RTS012N4S03

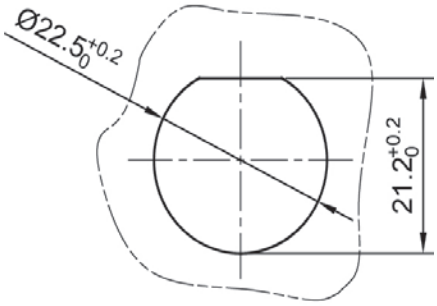

MOUNTING HOLE

Shell Size: 12 **Number of Contacts: 4** **Contact Size: 16**
Sealing: IP67 / IP69k **Salt Spray: 500h**

Dimensions Plugs

Plug

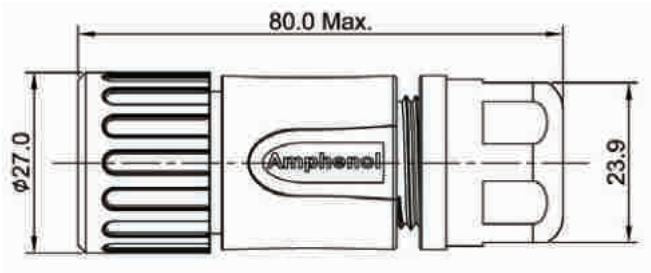

Male Figure 5 RTS6BS12N4P03

Plug

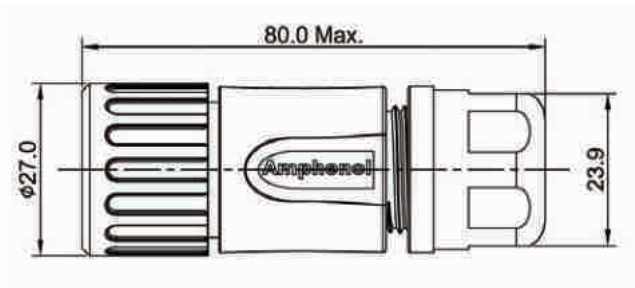

Female Figure 6 RTS6BS12N4S03

Accessories

Dust Cap for Receptacle, Size 12

RTS012DCG

Dust Cap for Plug, Size 12

RTS612NDCG

Sealing Plug, Size 16

A114017-SR

Coding Color Ring, Yellow, Size 12

RTS12CCRY

Coding Color Ring, Green, Size 12

RTS12CCRG

Coding Color Ring, Red, Size 12

RTS12CCRR

Shell Size: 12 **Number of Contacts: 4** **Contact Size: 16**
Sealing: IP67 / IP69k **Salt Spray: 500h**

Contacts Machined

Machined Contacts

Crimp Contacts, Machined

Part Number		AWG	Wire Range (mm²)	Plating
Male	Female			
MP14M23F	MS14M23F	14	2.0-2.5	Gold Flash
MP14M23G5	MS14M23G5	14	2.0-2.5	Gold 5µ"
MP14M23G10	MS14M23G10	14	2.0-2.5	Gold 10µ"
MP14M23G15	MS14M23G15	14	2.0-2.5	Gold 15µ"
MP14M23G30	MS14M23G30	14	2.0-2.5	Gold 30µ"
MP16M23F	MS16M23F	18-16	.75-1.5	Gold Flash
MP16M23G5	MS16M23G5	18-16	.75-1.5	Gold 5µ"
MP16M23G10	MS16M23G10	18-16	.75-1.5	Gold 10µ"
MP16M23G15	MS16M23G15	18-16	.75-1.5	Gold 15µ"
MP16M23G30	MS16M23G30	18-16	.75-1.5	Gold 30µ"
MP20M23F	MS20M23F	22-20	.34-.50	Gold Flash
MP20M23G5	MS20M23G5	22-20	.34-.50	Gold 5µ"
MP20M23G10	MS20M23G10	22-20	.34-.50	Gold 10µ"
MP20M23G15	MS20M23G15	22-20	.34-.50	Gold 15µ"
MP20M23G30	MS20M23G30	22-20	.34-.50	Gold 30µ"
MP24M23F	MS24M23F	26-24	.14-.25	Gold Flash
MP24M23G5	MS24M23G5	26-24	.14-.25	Gold 5µ"
MP24M23G10	MS24M23G10	26-24	.14-.25	Gold 10µ"
MP24M23G15	MS24M23G15	26-24	.14-.25	Gold 15µ"
MP24M23G30	MS24M23G30	26-24	.14-.25	Gold 30µ"

Tools

Contact Extraction Tool, #16 (Ø 1.6) Contact

QXRT16

Hand Crimp Tool for Machined Contacts

MFX-3959

Pneumatic Crimp Tool for Machined Contacts

MFX-3960

Shell Size: 12 **Number of Contacts: 4** **Contact Size: 16**
Sealing: IP67 / IP69k **Salt Spray: 500h**

Contacts Stamped & Formed

Stamped & Formed Contacts

Crimp Contacts, Stamped & Formed

Part Number		AWG	Wire Range (mm²)	Plating
Male	Female			
SP14M2F	SS14M2F	14	2.0-2.5	Gold Flash
SP14M2G5	SS14M2G5	14	2.0-2.5	Gold 5µ"
SP14M2G10	SS14M2G10	14	2.0-2.5	Gold 10µ"
SP14M2G15	SS14M2G15	14	2.0-2.5	Gold 15µ"
SP14M2G30	SS14M2G30	14	2.0-2.5	Gold 30µ"
SP16M2F	SS16M2F	18-16	.75-1.5	Gold Flash
SP16M2G5	SS16M2G5	18-16	.75-1.5	Gold 5µ"
SP16M2G10	SS16M2G10	18-16	.75-1.5	Gold 10µ"
SP16M2G15	SS16M2G15	18-16	.75-1.5	Gold 15µ"
SP16M2G30	SS16M2G30	18-16	.75-1.5	Gold 30µ"
SP20M2F	SS20M2F	22-20	.34-.50	Gold Flash
SP20M2G5	SS20M2G5	22-20	.34-.50	Gold 5µ"
SP20M2G10	SS20M2G10	22-20	.34-.50	Gold 10µ"
SP20M2G15	SS20M2G15	22-20	.34-.50	Gold 15µ"
SP20M2G30	SS20M1G30	22-20	.34-.50	Gold 30µ"
SP24M2F	SS24M2F	26-24	.14-.25	Gold Flash
SP24M2G5	SS24M2G5	26-24	.14-.25	Gold 5µ"
SP24M2G10	SS24M2G10	26-24	.14-.25	Gold 10µ"
SP24M2G15	SS24M2G15	26-24	.14-.25	Gold 15µ"
SP24M2G30	SS24M2G30	26-24	.14-.25	Gold 30µ"

Tools

Contact Extraction Tool, #16 (Ø 1.6) Contact

QXRT16

Hand Tool, Stamped & Formed Contact, Size 16, 20-14AWG

MFX-3954

Crimp Die for Stamped & Formed Contact

MFX-3957

STEP 1
Choose Receptacle Style

STEP 2
Choose Plug Style

Jam Nut Receptacles

RTS714N4P03

RTS714N4S03

RTS714N4PHEC03

Square Flange Receptacles

RTS014N4P03

RTS014N4S03

RTS014N4PHEC03

RTS014N4SHEC03

Plugs

RTS6BS14N4P03

RTS6BS14N4S03

RTS6BS14N4PHEC03

RTS6BS14N4SHEC03

SEE TABLE ON NEXT PAGE FOR PART DETAILS

CONTACTS SOLD SEPARATELY SEE PAGE 65

Shell Size: 14 Number of Contacts: 4 Contact Size: 2.5mm
Sealing: IP67 / IP69k Salt Spray: 500h

eco|mate® Aquarius Standard Products

- Suitable For Indoor and Outdoor Applications
- EMI/RMI Shielding Capability with Appropriate Backshell
- Operating Temperature: -40°C to +125°C
- 500 Mating Cycles
- Contacts and Cord Grips Ordered Separately
- UL ECBT2 Certified*

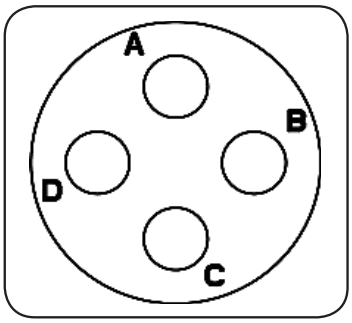

Insert Arrangement
Pin (Male) Faceview

Connector Part Numbers - Receptacles

PART NO#	Description	Temperature Range	Figure Drawing
RTS714N4P03	Receptacle, jam nut, 4 positions, size 14, pin contact, silicone rubber seal	-40 to 125°C	1
RTS714N4PHEC03	Receptacle, jam nut, 4 positions, size 14, pin contact, silicone rubber seal	-40 to 125°C	3
RTS714N4S03	Receptacle, jam nut, 4 positions, size 14, socket contact, silicone rubber seal	-40 to 125°C	2
RTS014N4P03	Receptacle, square flange, 4 positions, size 14, pin contact, silicone rubber seal	-40 to 125°C	4
RTS014N4PHEC03	Receptacle, square flange, 4 positions, size 14, pin contact, silicone rubber seal, endcap	-40 to 125°C	6
RTS014N4S03	Receptacle, square flange, 4 positions, size 14, socket contact, silicone rubber seal	-40 to 125°C	5
RTS014N4SHEC03	Receptacle, square flange, 4 positions, size 14, socket contact, silicone rubber seal, endcap	-40 to 125°C	7

Connector Part Numbers - Plugs

PART NO#	Description	Temperature Range	Figure Drawing
RTS6BS14N4P03	Straight plug with cord grip, 4 positions, size 14, pin contact, silicone rubber seal	-40 to 125°C	8
RTS6BS14N4PHEC03	Straight plug with end cap, 4 positions, size 14, pin contact, silicone rubber seal	-40 to 125°C	10
RTS6BS14N4S03	Straight plug with cord grip, 4 positions, size 14, socket contact, silicone rubber seal	-40 to 125°C	9
RTS6BS14N4SHEC03	Straight plug with end cap, 4 positions, size 14, socket contact, silicone rubber seal	-40 to 125°C	11

Contacts supplied separately see page 65

Shell Size: 14 **Number of Contacts: 4** **Contact Size: 2.5mm**
Sealing: IP67 / IP69k **Salt Spray: 500h**

Dimensions Jam Nut Receptacles

Jam Nut Receptacle

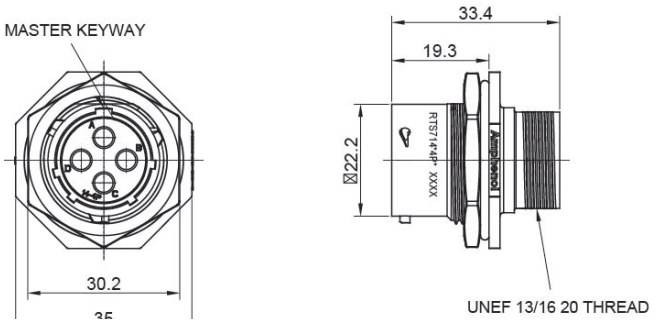

Male Figure 1 RTS714N4P03

Jam Nut Receptacle

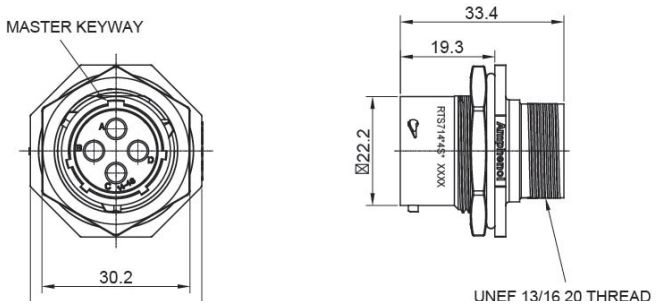

Female Figure 2 RTS714N4S03

Jam Nut Receptacle with Endcap

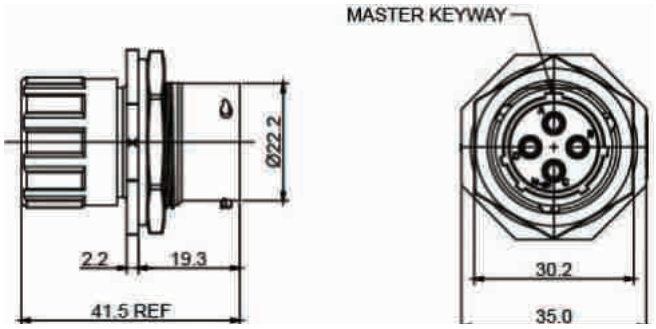

Male Figure 3 RTS714N4PHEC03

Shell Size: 14 Number of Contacts: 4 Contact Size: 2.5mm
Sealing: IP67 / IP69k Salt Spray: 500h

Dimensions Square Flange Receptacles

Sqaure Flange Receptacle

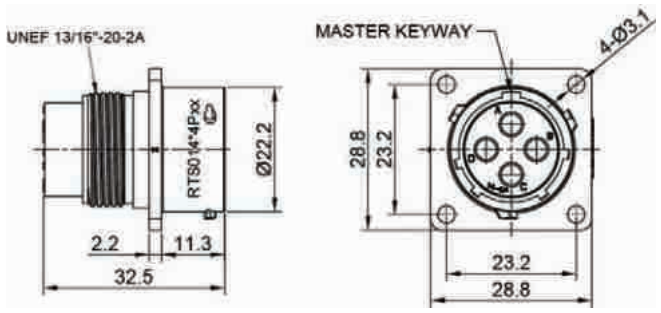

Male Figure 4 RTS014N4P03

Sqaure Flange Receptacle

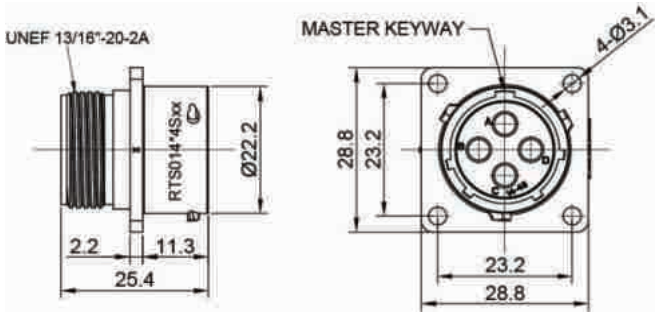

Female Figure 5 RTS6BS14N4S03

Sqaure Flange Receptacle with Endcap

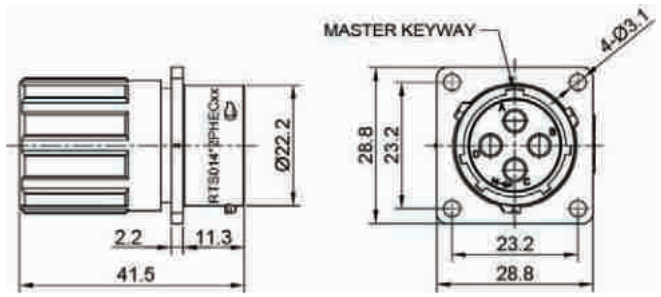

Male Figure 6 RTS014N4PHEC03

Sqaure Flange Receptacle with Endcap

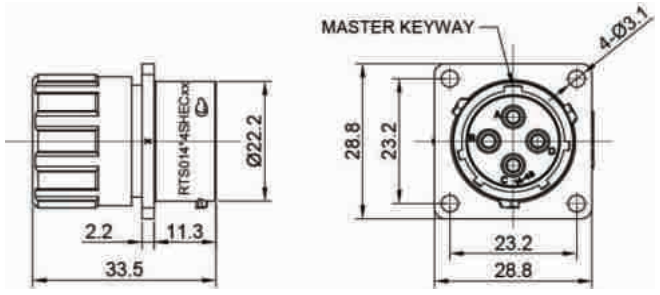

Female Figure 7 RTS014N4SHEC03

Shell Size: 14 **Number of Contacts: 4** **Contact Size: 2.5mm**
Sealing: IP67 / IP69k **Salt Spray: 500h**

Dimensions Plugs

Plug

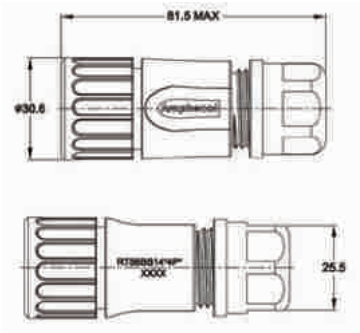

Male Figure 8 RTS6BS14N4P03

Plug

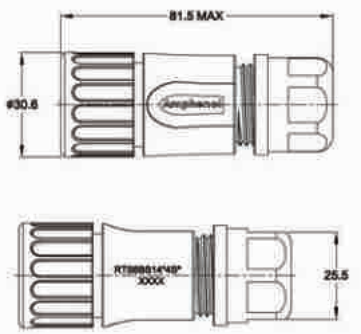

Female Figure 9 RTS6BS14N4S03

Plug with Endcap

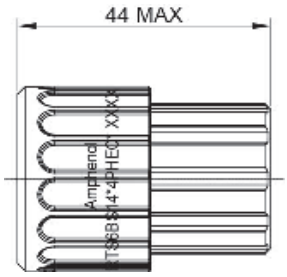

Male Figure 10 RTS6BS14N4PHEC03

Plug with Endcap

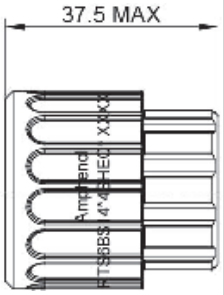

Female Figure 11 RTS6BS14N4SHEC03

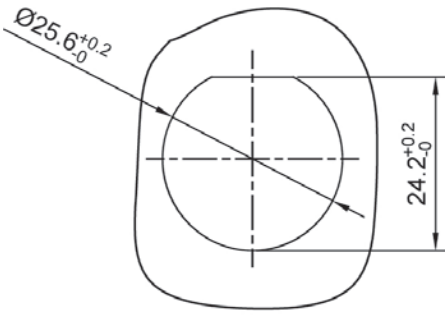

PANEL CUTOUT REFERENCE
THICKNESS:3.2MM (MAX)

Shell Size: 14 **Number of Contacts: 4** **Contact Size: 2.5mm**
Sealing: IP67 / IP69k **Salt Spray: 500h**

Accessories

Dust Cap for Receptacle, Size 14

RTS014DCG

Dust Cap for Plug, Size 14

RTS614NDCG

Sealing Plug, Size 2.5mm

A114017

Coding Color Ring, Yellow, Size 14

RTS14CCRY

Coding Color Ring, Green, Size 14

RTS14CCRG

Coding Color Ring, Red, Size 14

RTS14CCRR

Contacts

Stamped & Formed Contacts

Crimp Contacts, Stamped & Formed

Part Number		AWG	Wire Range (mm²)	Plating
Male	Female			
SP12A1T	SS12A1T	14-12	2.5-3.5	Tin

*No machined contacts are available for this group

Tools

Extraction Tool 2.5mm Contact

QXRT12S

Hand Tool, Stamped & Formed Contact, 2.5 mm

MFX-3962

STEP 1 Choose Receptacle Style	STEP 2 Choose Plug Style

SEE TABLE ON NEXT PAGE FOR PART DETAILS

Jam Nut Receptacles

RTS716N4P03

RTS716N4S03

RTS716N4PHEC03

Square Flange Receptacles

RTS016N4P03

RTS016N4S03

RTS016N4PHEC03

RTS016N4SHEC03

Plug

RTS6BS16N4P03

RTS6BS16N4S03

RTS6BS16N4PHEC03

RTS6BS16N4SHEC03

CONTACTS SOLD SEPARATELY SEE PAGE 70

Shell Size: 16 Number of Contacts: 4 Contact Size: 3.6mm
Sealing: IP67 / IP69k Salt Spray: 500h

eco|mate® Aquarius Standard Products

- Suitable For Indoor and Outdoor Applications
- EMI/RMI Shielding Capability with Appropriate Backshell
- Operating Temperature: -40°C to +125°C
- 500 Mating Cycles
- Contacts and Cord Grips Ordered Separately
- UL ECBT2 Certified*

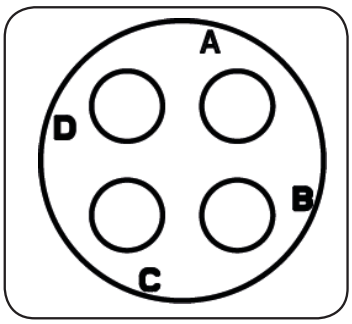

Insert Arrangement
Pin (Male) Faceview

Connector Part Numbers - Receptacles

PART NO#	Description	Temperature Range	Figure Drawing
RTS716N4P03	Receptacle, jam nut, 4 positions, size 16, pin contact, silicone rubber seal	-40 to 125°C	1
RTS716N4PHEC03	Receptacle, jam nut, 4 positions, size 16, pin contact, silicone rubber seal, endcap	-40 to 125°C	3
RTS716N4S03	Receptacle, jam nut, 4 positions, size 16, socket contact, silicone rubber seal	-40 to 125°C	2
RTS016N4P03	Receptacle, square flange, 4 positions, size 16, pin contact, silicone rubber seal	-40 to 125°C	4
RTS016N4PHEC03	Receptacle, square flange, 4 positions, size 16, pin contact, silicone rubber seal, endcap	-40 to 125°C	6
RTS016N4S03	Receptacle, square flange, 4 positions, size 16, socket contact, silicone rubber seal	-40 to 125°C	5
RTS016N4SHEC03	Receptacle, square flange, 4 positions, size 16, socket contact, silicone rubber seal, endcap	-40 to 125°C	7

Connector Part Numbers - Plugs

PART NO#	Description	Temperature Range	Figure Drawing
RTS6BS16N4P03	Straight plug with cord grip, 19 positions, size 16, pin contact, silicone rubber seal	-40 to 125°C	8
RTS6BS16N4PHEC03	Straight plug with endcap, 19 positions, size 16, pin contact	40 to 125°C	10
RTS6BS16N4S03	Straight plug with cord grip, 19 positions, size 16, socket contact, silicone rubber seal	-40 to 125°C	9
RTS6BS16N14SHEC03	Straight plug with endcap, 19 positions, size 16, socket contact	40 to 125°C	11

Contacts supplied separately see page 70

Shell Size: 16 Number of Contacts: 4 Contact Size: 3.6mm
Sealing: IP67 / IP69k Salt Spray: 500h

Dimensions Jam Nut

Jam Nut Receptacle

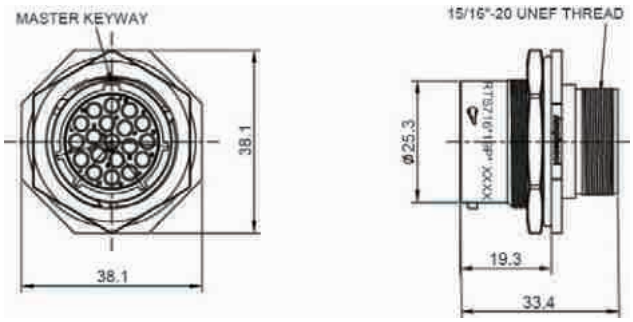

Male Figure 1 RTS716N19P03

Jam Nut Receptacle

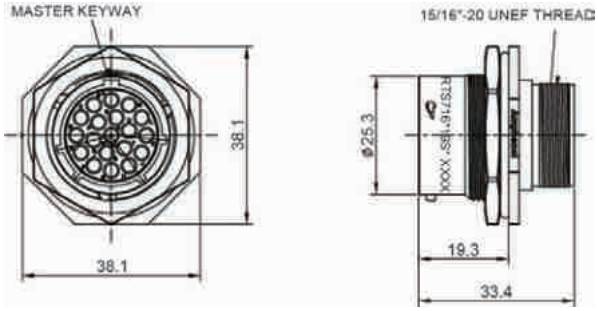

Female Figure 2 RTS716N19S03

Jam Nut Receptacle with Endcap

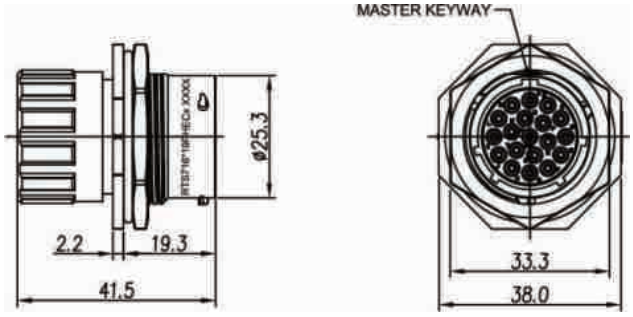

Male Figure 3 RTS716N19PHEC03

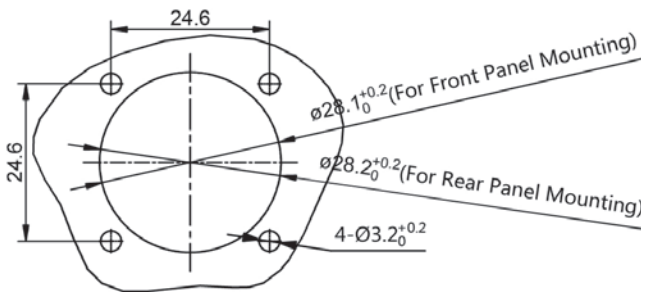

Shell Size: 16 Number of Contacts: 4 Contact Size: 3.6mm
Sealing: IP67 / IP69k Salt Spray: 500h

Dimensions Square Flange Receptacles

Square Flange Receptacle

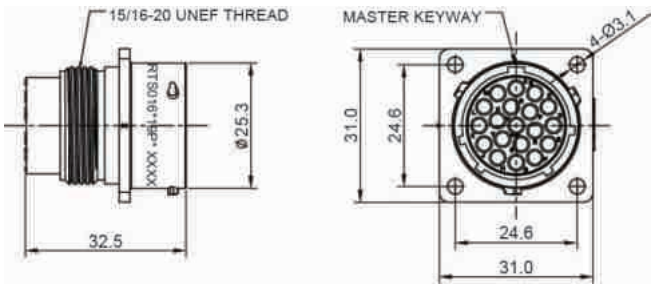

Male Figure 4 RTS016N19P03

Square Flange Receptacle

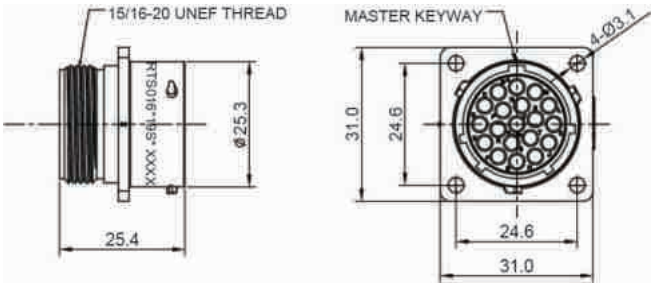

Female Figure 5 RTS016N19S03

Square Flange Receptacle with Endcap

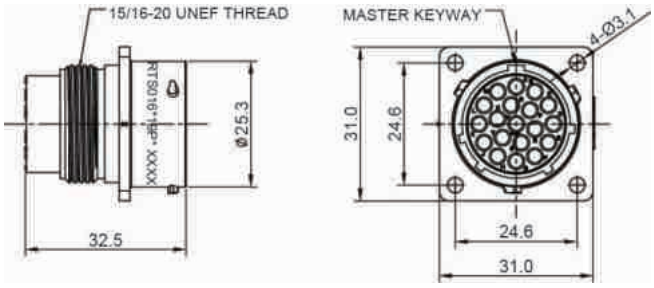

Male Figure 6 RTS016N19PHEC03

Square Flange Receptacle with Endcap

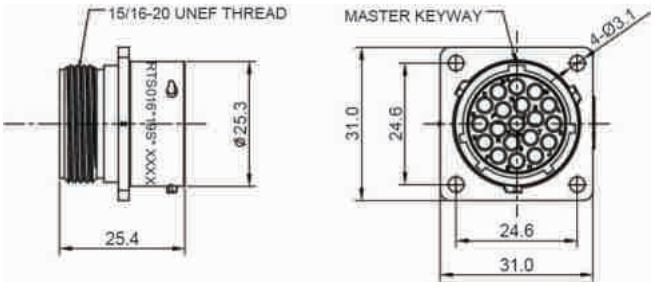

Female Figure 7 RTS016N19SHEC03

Shell Size: 16 **Number of Contacts: 4** **Contact Size: 3.6mm**
Sealing: IP67 / IP69k **Salt Spray: 500h**

Dimensions Plugs

Plug

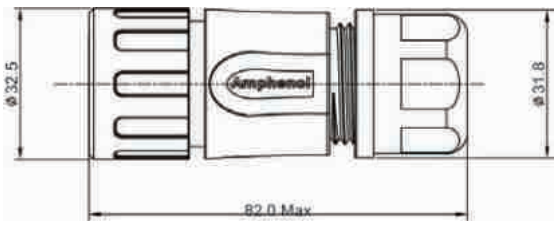

Male Figure 8 RTS6BS16N19P03

Plug

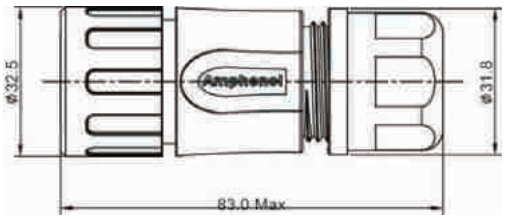

Female Figure 9 RTS6BS16N19S03

Plug with Endcap

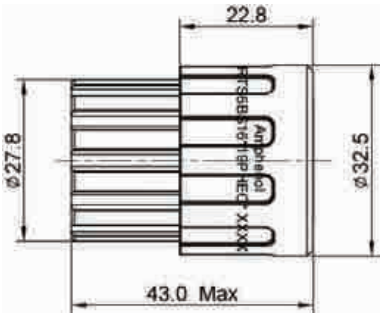

Male Figure 10 RTS6BS16N19PHEC03

Plug with Endcap

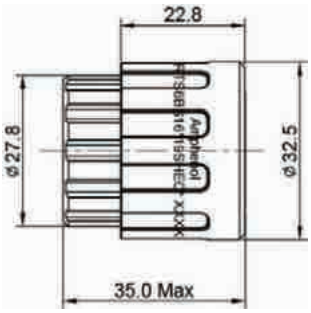

Female Figure 11 RTS6BS16N19SHEC03

Crimp Contacts, Machined

Part Number		AWG	Wire Range (mm²)	Plating
Male	Female			
MP10A23S	MS10A23S	8	3.0-6.0	Silver Plated

no stamped & formed contacts are available for this groupt

Shell Size: 16 Number of Contacts: 4 Contact Size: 3.6mm
Sealing: IP67 / IP69k Salt Spray: 500h

Accessories

Dust Cap for Receptacle, Size 16

RTS016DCG

Dust Cap for Plug, Size 16

RTS616NDCG

Coding Color Ring, Yellow, Size 16

RTS16CCRY

Coding Color Ring, Green, Size 16

RTS16CCRG

Coding Color Ring, Red, Size 16

RTS16CCRR

Tools

Extraction Tool 3.6mm Contact

QXRT08

Extraction Tool (for eco | mate® rm with Radsok) 3.6mm Contact

QXRT08R

Crimper

M300BT

Locator

TP968

STEP 1
Choose Receptacle Style

STEP 2
Choose Plug Style

Jam Nut Receptacles

RTS710N2P03

RTS710N2S03

RTS710N2PHEC03

Square Flange Receptacles

RTS010N2P03

RTS010N2S03

RTS010N2PHEC03

RTS010N2SHEC03

Plugs

RTS6BS10N2P03

RTS6BS10N2S03

RTS6BS10N2PHEC03

RTS6BS10N2SHEC03

SEE TABLE ON NEXT PAGE FOR PART DETAILS

CONTACTS SOLD SEPARATELY SEE PAGE 77

Shell Size: 10 Number of Contacts: 4 (2+2) Contact Size: 2-20/2-16
Sealing: IP67 / IP69k Salt Spray: 500h

eco|mate® Aquarius Standard Products

- Suitable For Indoor and Outdoor Applications
- EMI/RMI Shielding Capability with Appropriate Backshell
- Operating Temperature: -40°C to +125°C
- 500 Mating Cycles
- Contacts and Cord Grips Ordered Separately
- UL ECBT2 Certified*

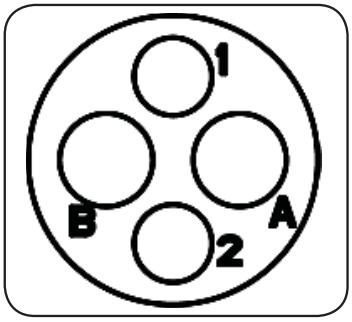

Insert Arrangement
Pin (Male) Faceview

Connector Part Numbers -Receptacles

PART NO#	Description	Temperature Range	Figure Drawing
RTS710N2P03	Receptacle, jam nut, 2+2 positions, size 10, pin contact, silicone rubber seal	-40 to 125°C	1
RTS710N2PHEC03	Receptacle, jam nut, 2+2 positions, size 10, pin contact, silicone rubber seal with endcap	-40 to 125°C	3
RTS710N2S03	Receptacle, jam nut, 2+2 positions, size 10, socket contact, silicone rubber seal	-40 to 125°C	2
RTS010N2P03	Receptacle, square flange, 2+2 positions, size 10, pin contact, silicone rubber seal	-40 to 125°C	4
RTS010N2PHEC03	Receptacle, square flange, 2+2 positions, size 10, pin contact, silicone rubber seal, with endcap	-40 to 125°C	5
RTS010N2S03	Receptacle, square flange, 2+2 positions, size 10, socket contact, silicone rubber seal	-40 to 125°C	6
RTS010N2SHEC03	Receptacle, square flange, 2+2 positions, size 10, socket contact, silicone rubber seal,with endcap	-40 to 125°C	7

Connector Part Numbers -Plugs

PART NO#	Description	Temperature Range	Figure Drawing
RTS6BS10N2P03	Straight plug with cord grip, 2+2 positions, size 10, pin contact, silicone rubber seal	-40 to 125°C	8
RTS6BS10N2PHEC03	Straight plug with endcap, 2+2 positions, size 10, pin contact, silicone rubber seal	-40 to 125°C	10
RTS6BS10N2S03	Straight plug with cord grip, 2+2 positions, size 10,r socket contact, silicone rubber seal	-40 to 125°C	9
RTS6BS10N2SHEC03	Straight plug with endcap, 2+2 positions, size 10, socket contact, silicone rubber seal	-40 to 125°C	11

Contacts supplied separately see page 77

Shell Size: 10 Number of Contacts: 4 (2+2) Contact Size: 2-20/2-16
Sealing: IP67 / IP69k Salt Spray: 500h

Dimensions Jam Nut

Jam Nut Receptacle

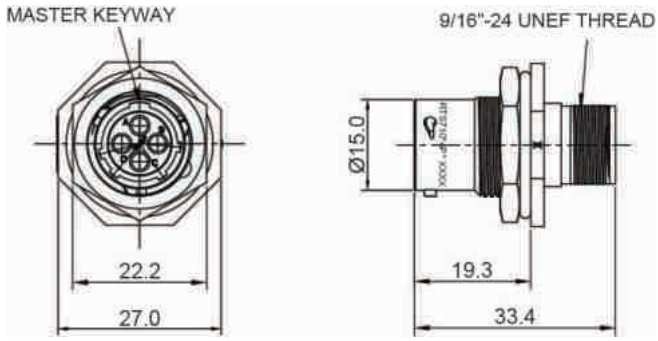

Male Figure 1 RTS710N2P03

Jam Nut Receptacle

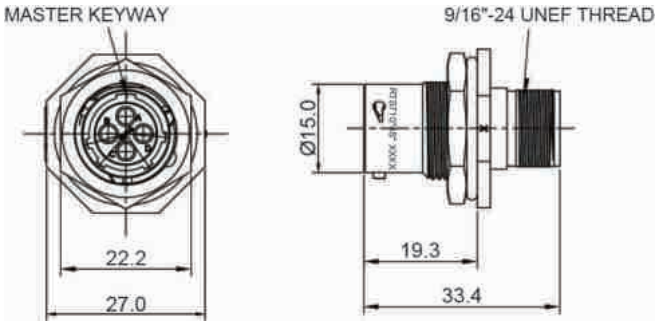

Female Figure 2 RTS710N2S03

Jam Nut Receptacle w Endcap

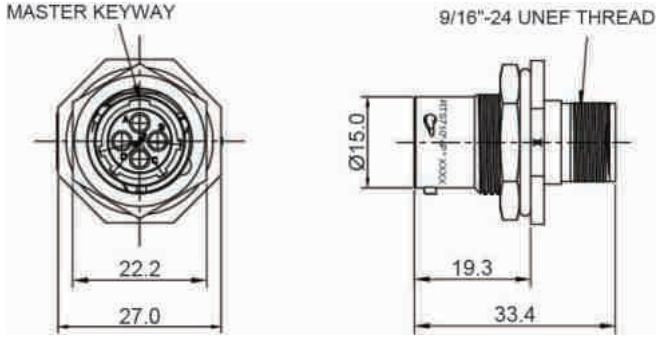

Male Figure 3 RTS710N2PHEC03

Shell Size: 10 **Number of Contacts: 4 (2+2)** **Contact Size: 2-20/2-16**
Sealing: IP67 / IP69k **Salt Spray: 500h**

Dimensions Square Flange Receptacles

Square Flange Receptacle

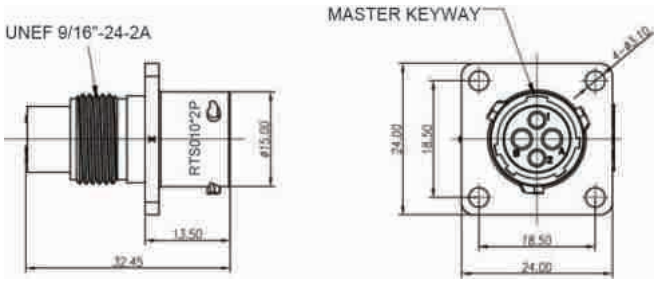

Male Figure 4 RTS010N2P03

Square Flange Receptacle

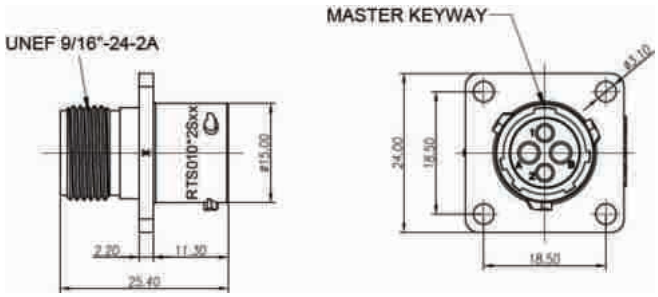

Female Figure 5 RTS010N2S03

Square Flange Receptacle w Endcap

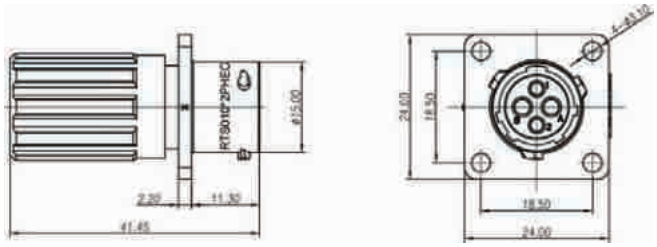

Male Figure 6 RTS010N2PHEC03

Square Flange Receptacle w Endcap

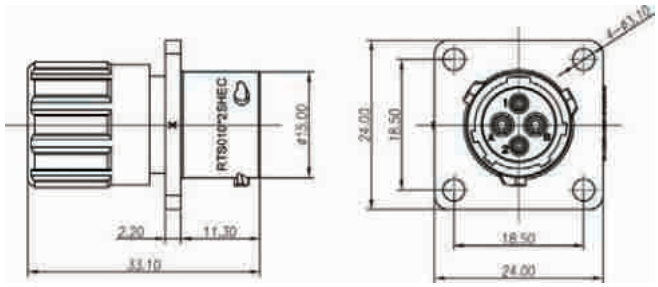

Female Figure 7 RTS010N2SHEC03

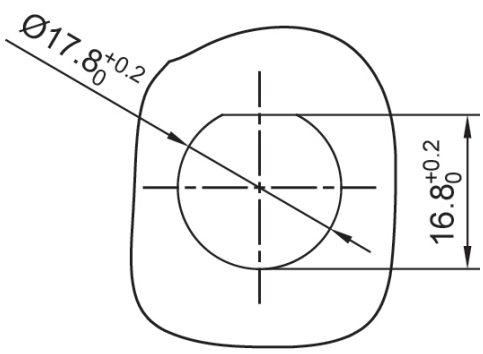

PANEL CUT OUT REFERENCE

Shell Size: 10 **Number of Contacts: 4 (2+2)** **Contact Size: 2-20/2-16**
Sealing: IP67 / IP69k **Salt Spray: 500h**

Dimensions Plugs

Plug

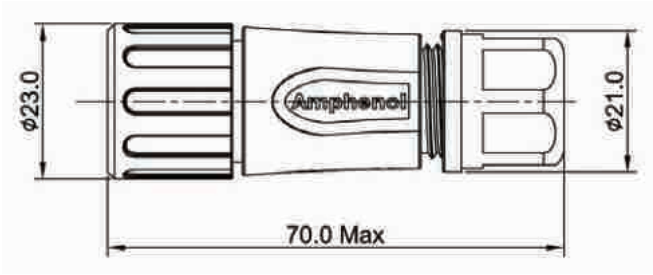

Male Figure 8 RTS6BS10N2P03

Plug

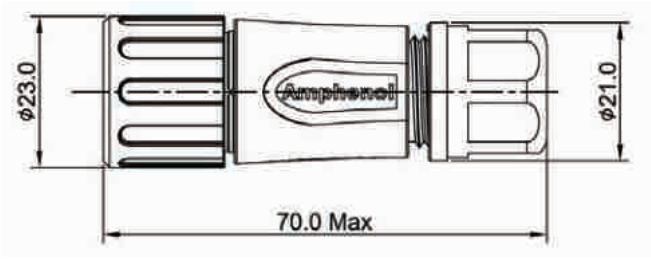

Female Figure 9 RTS6BS10N2S03

Plug with Endcap

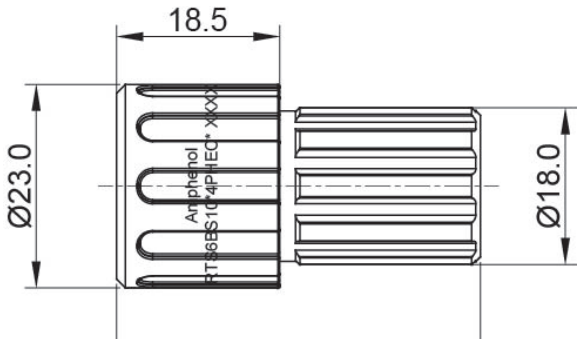

Male Figure 10 RTS6BS10N2PHEC03

Plug with Endcap

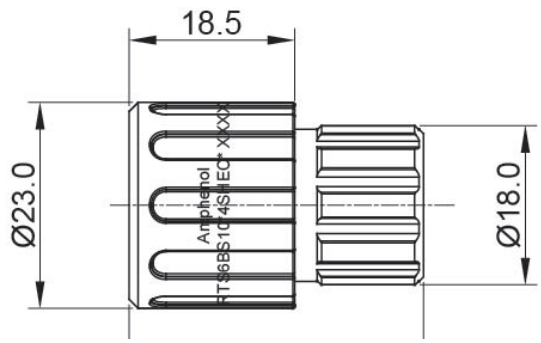

Female Figure 11 RTS6BS10N2PHEC03

Shell Size: 10 Number of Contacts: 4 (2+2) Contact Size: 2-20/2-16
Sealing: IP67 / IP69k Salt Spray: 500h

Contacts Machined

Machined Contacts

Crimp Contacts, Machined (7.5A Max)

Part Number		Contact Size	AWG	Wire Range (mm²)	Plating
Male	Female				
MP14M23F	MS14M23F	16	14	2.0-2.5	Gold Flash
MP14M23G5	MS14M23G5	16	14	2.0-2.5	Gold 5µ"
MP14M23G10	MS14M23G10	16	14	2.0-2.5	Gold 10µ"
MP14M23G15	MS14M23G15	16	14	2.0-2.5	Gold 15µ"
MP14M23G30	MS14M23G30	16	14	2.0-2.5	Gold 30µ"
MP16M23F	MS16M23F	16	18-16	.75-1.5	Gold Flash
MP16M23G5	MS16M23G5	16	18-16	.75-1.5	Gold 5µ"
MP16M23G10	MS16M23G10	16	18-16	.75-1.5	Gold 10µ"
MP16M23G15	MS16M23G15	16	18-16	.75-1.5	Gold 15µ"
MP16M23G30	MS16M23G30	16	18-16	.75-1.5	Gold 30µ"
MP20M23F	MS20M23F	16	22-20	.34-.50	Gold Flash
MP20M23G5	MS20M23G5	16	22-20	.34-.50	Gold 5µ"
MP20M23G10	MS20M23G10	16	22-20	.34-.50	Gold 10µ"
MP20M23G15	MS20M23G15	16	22-20	.34-.50	Gold 15µ"
MP20M23G30	MS20M23G30	16	22-20	.34-.50	Gold 30µ"
MP24M23F	MS24M23F	16	26-24	.14-.25	Gold Flash
MP24M23G5	MS24M23G5	16	26-24	.14-.25	Gold 5µ"
MP24M23G10	MS24M23G10	16	26-24	.14-.25	Gold 10µ"
MP24M23G15	MS24M23G15	16	26-24	.14-.25	Gold 15µ"
MP24M23G30	MS24M23G30	16	26-24	.14-.25	Gold 30µ"

Shell Size: 10 **Number of Contacts: 4 (2+2)** **Contact Size: 2-20/2-16**
Sealing: IP67 / IP69k **Salt Spray: 500h**

Contacts Machined (con't)

Machined Contacts

Crimp Contacts, Machined (7.5A Max)

Part Number		Size	AWG	Wire Ranget (mm²)	Plating
Male	Female				
MP20W23F	MS20W23F	20	22-20	.34-.50	Gold Flash
MP20W23G5	MS20W23G5	20	22-20	.34-.50	Gold 5µ"
MP20W23G10	MS20W23G10	20	22-20	.34-.50	Gold 10µ"
MP20W23G15	MS20W23G15	20	22-20	.34-.50	Gold 15µ"
MP20W23G30	MS20W23G30	20	22-20	.34-.50	Gold 30µ"
MP24W23F	MS24W23F	20	26-24	.13-.25	Gold Flash
MP24W23G5	MS24W23G5	20	26-24	.13-.25	Gold 5µ"
MP24W23G10	MS24W23G10	20	26-24	.13-.25	Gold 10µ"
MP24W23G15	MS24W23G15	20	26-24	.13-.25	Gold 15µ"
MP24W23G30	MS24W23G30	20	26-24	.13-.25	Gold 30µ"
MP28W23F	MS28W23F	20	30-28	.05-.08	Gold Flash
MP28W23G5	MS28W23G5	20	30-28	.05-.08	Gold 5µ"
MP28W23G10	MS28W23G10	20	30-28	.05-.08	Gold 10µ"
MP28W23G15	MS28W23G15	20	30-28	.05-.08	Gold 15µ"
MP28W23G30	MS28W23G30	20	30-28	.05-.08	Gold 30µ"

Tools

Contact Extraction Tool, #20 (Ø 1.6) Contact

QXRT20

Hand Crimp Tool for Machined Contacts

MFX-3959

Pneumatic Crimp Tool for Machined Contact

MFX-3960

Shell Size: 10 **Number of Contacts: 4 (2+2)** **Contact Size: 2-20/2-16**
Sealing: IP67 / IP69k **Salt Spray: 500h**

Contacts Stamped & Formed

Stamped & Formed Contacts

Crimp Contacts, Stamped & Formed

Part Number		Size	AWG	Wire Range (mm²)	Plating
Male	Female				
SP14M2F	SS14M2F	16	14	2.0-2.5	Gold Flash
SP14M2G5	SS14M2G5	16	14	2.0-2.5	Gold 5µ"
SP14M2G10	SS14M2G10	16	14	2.0-2.5	Gold 10µ"
SP14M2G15	SS14M2G15	16	14	2.0-2.5	Gold 15µ"
SP14M2G30	SS14M2G30	16	14	2.0-2.5	Gold 30µ"
SP16M2F	SS16M2F	16	18-16	.75-1.5	Gold Flash
SP16M2G5	SS16M2G5	16	18-16	.75-1.5	Gold 5µ"
SP16M2G10	SS16M2G10	16	18-16	.75-1.5	Gold 10µ"
SP16M2G15	SS16M2G15	16	18-16	.75-1.5	Gold 15µ"
SP16M2G30	SS16M2G30	16	18-16	.75-1.5	Gold 30µ"
SP20M2F	SS20M2F	16	22-20	.34-.50	Gold Flash
SP20M2G5	SS20M2G5	16	22-20	.34-.50	Gold 5µ"
SP20M2G10	SS20M2G10	16	22-20	.34-.50	Gold 10µ"
SP20M2G15	SS20M2G15	16	22-20	.34-.50	Gold 15µ"
SP20M2G30	SS20M1G30	16	22-20	.34-.50	Gold 30µ"
SP24M2F	SS24M2F	16	26-24	.14-.25	Gold Flash
SP24M2G5	SS24M2G5	16	26-24	.14-.25	Gold 5µ"
SP24M2G10	SS24M2G10	16	26-24	.14-.25	Gold 10µ"
SP24M2G15	SS24M2G15	16	26-24	.14-.25	Gold 15µ"
SP24M2G30	SS24M2G30	16	26-24	.14-.25	Gold 30µ"

Tools

Contact Extraction Tool, #16 (Ø 1.6) Contact

QXRT16

Hand Tool, Stamped & Formed Contact, Size 16 20-14AWG

MFX-3954

Crimp Die for Stamped & Formed Contact

MFX-3957

Shell Size: 10 Number of Contacts: 4 (2+2) Contact Size: 2-20/2-16
Sealing: IP67 / IP69k Salt Spray: 500h

Crimp Contacts, Stamped & Formed (con't)

Part Number		Contact Size	AWG	Wire Range (mm²)	Plating
Male	Female				
SP20W2F	SS20W2F	20	22-20	.34-.50	Gold Flash
SP20W2G5	SS20W2G5	20	22-20	.34-.50	Gold 5µ"
SP20W2G10	SS20W2G10	20	22-20	.34-.50	Gold 10µ"
SP20W2G15	SS20W2G15	20	22-20	.34-.50	Gold 15µ"
SP20W2G30	SS20W2G30	20	22-20	.34-.50	Gold 30µ"
SP24W2F	SS24W2F	20	26-24	.14-.25	Gold Flash
SP24W2G5	SS24W2G5	20	26-24	.14-.25	Gold 5µ"
SP24W2G10	SS24W2G10	20	26-24	.14-.25	Gold 10µ"
SP24W2G15	SS24W2G15	20	26-24	.14-.25	Gold 15µ"
SP24W2G30	SS24W2G30	20	26-24	.14-.25	Gold 30µ"
SP28W2F	SS28W2F	20	30-28	.05-.08	Gold Flash
SP28W2G5	SS28W2G5	20	30-28	.05-.08	Gold 5µ"
SP28W2G10	SS28W2G10	20	30-28	.05-.08	Gold 10µ"
SP28W2G15	SS28W2G15	20	30-28	.05-.08	Gold 15µ"
SP28W2G30	SS28W2G30	20	30-28	.05-.08	Gold 30µ"

Shell Size: 10 Number of Contacts: 4 (2+2) Contact Size: 2-20/2-16
Sealing: IP67 / IP69k Salt Spray: 500h

Accessories

Dust Cap for Receptacle, Size 10

RTS010DCG

Dust Cap for Plug, Size 10

RTS610NDCG

Sealing Plug, Size 16

A114017-SR

Sealing Plug, Size 20

AT13-204-2005

Coding Color Ring, Yellow, Size 10

RTS10CCRY

Coding Color Ring, Green, Size 10

RTS10CCRG

Coding Color Ring, Red, Size 10

RTS10CCRR

STEP 1
Choose Receptacle Style

STEP 2
Choose Plug Style

Jam Nut Receptacles

RTS712N2P03

RTS712N2S03

RTS712N2PHEC03

Square Flange Receptacles

RTS012N2P03

RTS012N2S03

RTS012N2PHEC03

RTS012N2SHEC03

Plugs

RTS6BS12N2P03

RTS6BS12N2S03

RTS6BS12N2PHEC03

RTS6BS12N2SHEC03

SEE TABLE ON NEXT PAGE FOR PART DETAILS

CONTACTS SOLD SEPARATELY SEE PAGE 88

Shell Size: 12 Number of Contacts: 4 (2+2) Contact Size: 2-20/2-2.5mm
Sealing: IP67 / IP69k Salt Spray: 500h

eco|mate® Aquarius Standard Products

- Suitable For Indoor and Outdoor Applications
- EMI/RMI Shielding Capability with Appropriate Backshell
- Operating Temperature: -40°C to +125°C
- 500 Mating Cycles
- Contacts and Cord Grips Ordered Separately
- UL ECBT2 Certified*

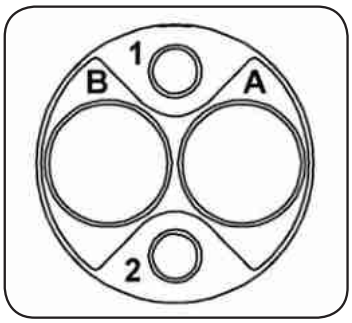

Insert Arrangement
Pin (Male) Faceview

Connector Part Numbers -Receptacles

PART NO#	Description	Temperature Range	Figure Drawing
RTS712N2P03	Receptacle, jam nut, 2+2 positions, size 12, pin contact, silicone rubber seal	-40 to 125°C	1
RTS712N2PHEC03	Receptacle, jam nut, 2+2 positions, size 12, pin contact, silicone rubber seal, with endcap	-40 to 125°C	3
RTS712N2S03	Receptacle, jam nut, 2+2 positions, size 12, socket contact, silicone rubber seal	-40 to 125°C	2
RTS012N2P03	Receptacle, square flange, 2+2 positions, size 12, pin contact, silicone rubber seal	-40 to 125°C	4
RTS012N2PHEC03	Receptacle, square flange, 2+2 positions, size 12, pin contact, silicone rubber seal, endcap	-40 to 125°C	6
RTS012N2S03	Receptacle, square flange, 2+2 positions, size 12, socket contact, silicone rubber seal	-40 to 125°C	5
RTS012N2SHEC03	Receptacle, square flange, 2+2 positions, size 12, socket contact, silicone rubber seal, endcap	-40 to 125°C	8

Connector Part Numbers -Plugs

PART NO#	Description	Temperature Range	Figure Drawing
RTS6BS12N2P03	Straight plug with cord grip, 2+2 positions, size 12, pin contact, silicone rubber seal	-40 to 125°C	9
RTS6BS12N2PHEC03	Straight plug with end cap, 2+2 positions, size 12, pin contact, silicone rubber seal	-40 to 125°C	11
RTS6BS12N2S03	Straight plug with cord grip, 2+2 positions, size 12, socket contact, silicone rubber seal	-40 to 125°C	10
RTS6BS12N2SHEC03	Straight plug with end cap, 2+2 positions, size 12, socket contact, silicone rubber seal	-40 to 125°C	12

Contacts supplied separately see page 88

Shell Size: 12 **Number of Contacts: 4 (2+2)** **Contact Size: 2-20/2-2.5mm**
Sealing: IP67 / IP69k **Salt Spray: 500h**

Dimensions Jam Nut Receptacle

Jam Nut Receptacle

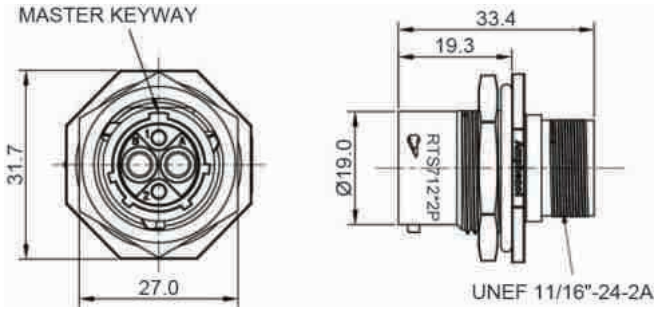

Male Figure 1 RTS712N2P03

Jam Nut Receptacle

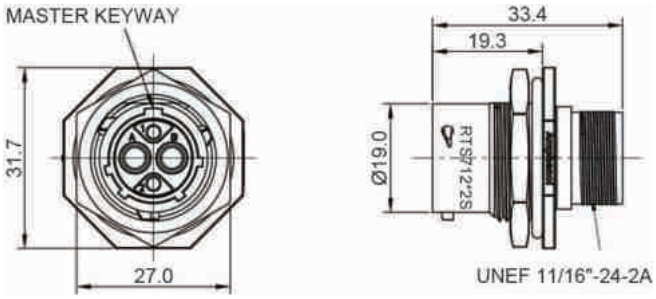

Female Figure 2 RTS712N2S03

Jam Nut Receptacle with Endcap

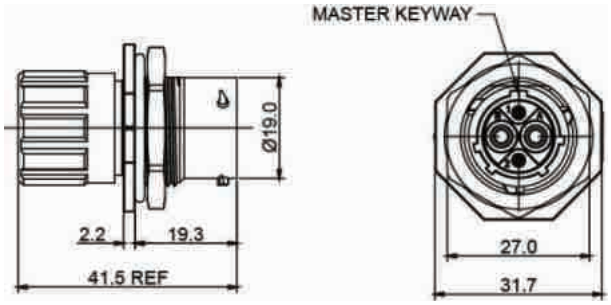

Male Figure 3 RTS712N2PHEC03

Shell Size: 12 **Number of Contacts: 4 (2+2)** **Contact Size: 2-20/2-2.5mm**
Sealing: IP67 / IP69k **Salt Spray: 500h**

Dimensions Square Flange Receptacle

Square Flange Receptacle

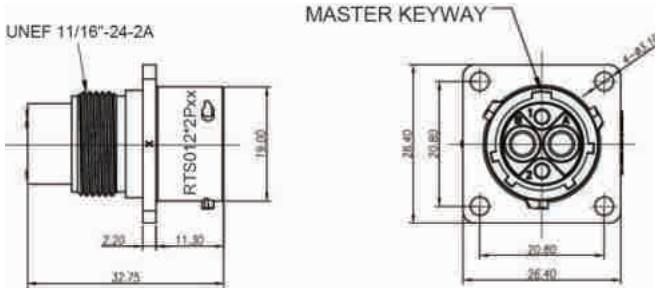

Male Figure 4 RTS012N2P03

Square Flange Receptacle

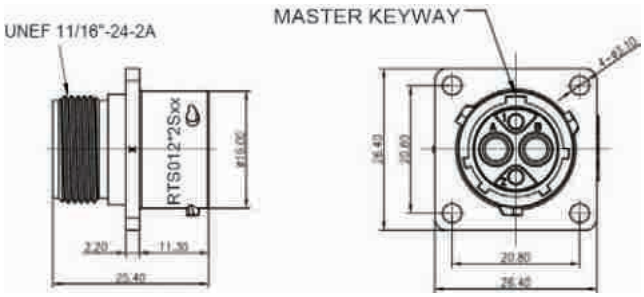

Female Figure 5 RTS012N2S03

Square Flange Receptacle with Endcap

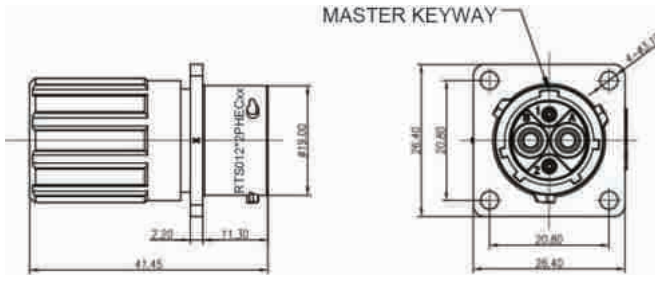

Male Figure 6 RTS012N2PHEC03

Square Flange Receptacle with Endcap

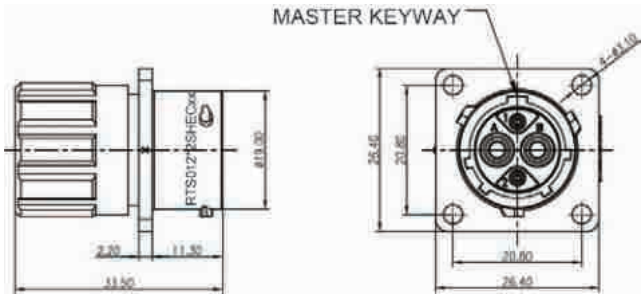

Female Figure 7 RTS012N2SHEC03

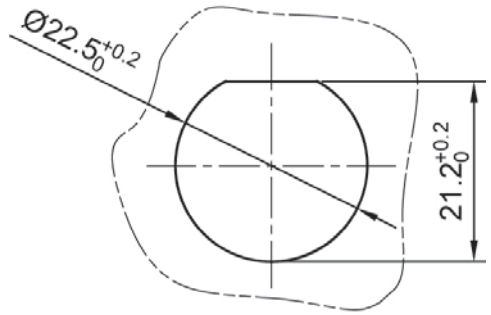

MOUNTING HOLE

Shell Size: 12 **Number of Contacts: 4 (2+2)** **Contact Size: 2-20/2-2.5mm**
Sealing: IP67 / IP69k **Salt Spray: 500h**

Dimensions Plug

Plug

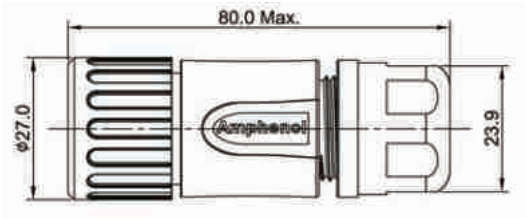

Male Figure 8 RTS6BS12N2P03

Plug

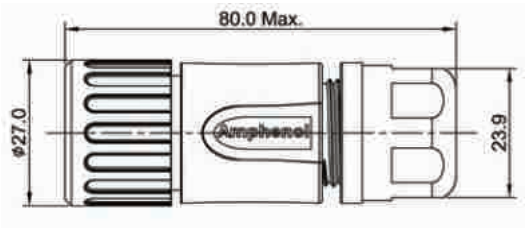

Female Figure 9 RTS6BS12N2S03

Plug with Endcap

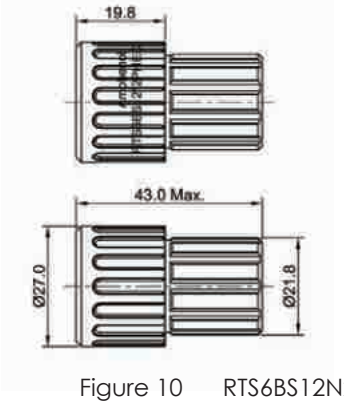

Male Figure 10 RTS6BS12N2PHEC03

Plug with Endcap

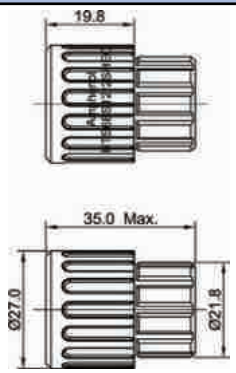

Female Figure 11 RTS6BS12N2SHEC03

Shell Size: 12 Number of Contacts: 4 (2+2) Contact Size: 2-20/2-2.5mm
Sealing: IP67 / IP69k Salt Spray: 500h

Accessories

Dust Cap for Receptacle, Size 12

RTS012DCG

Dust Cap for Plug, Size 12

RTS612NDCG

Sealing Plug, Size 20

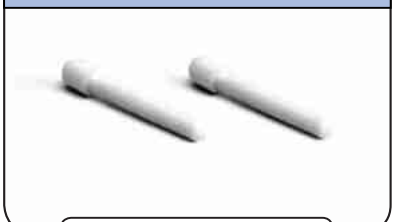

AT13-204-2005

Sealing Plug, Size 2.5mm

A114017

Coding Color Ring, Yellow, Size 12

RTS12CCRY

Coding Color Ring, Green, Size 12

RTS12CCRG

Coding Color Ring, Red, Size 12

RTS12CCRR

Shell Size: 12 **Number of Contacts: 4 (2+2)** **Contact Size: 2-20/2-2.5mm**
Sealing: IP67 / IP69k **Salt Spray: 500h**

Contacts Machined

Machined Contacts

Crimp Contacts, Machined (7.5A Max)

Part Number		Cotact Size	AWG	Wire Range (mm²)	Plating
Male	Female				
MP20W23F	MS20W23F	20	22-20	.34-.50	Gold Flash
MP20W23G5	MS20W23G5	20	22-20	.34-.50	Gold 5µ"
MP20W23G10	MS20W23G10	20	22-20	.34-.50	Gold 10µ"
MP20W23G15	MS20W23G15	20	22-20	.34-.50	Gold 15µ"
MP20W23G30	MS20W23G30	20	22-20	.34-.50	Gold 30µ"
MP24W23F	MS24W23F	20	26-24	.13-.25	Gold Flash
MP24W23G5	MS24W23G5	20	26-24	.13-.25	Gold 5µ"
MP24W23G10	MS24W23G10	20	26-24	.13-.25	Gold 10µ"
MP24W23G15	MS24W23G15	20	26-24	.13-.25	Gold 15µ"
MP24W23G30	MS24W23G30	20	26-24	.13-.25	Gold 30µ"
MP28W23F	MS28W23F	20	30-28	.05-.08	Gold Flash
MP28W23G5	MS28W23G5	20	30-28	.05-.08	Gold 5µ"
MP28W23G10	MS28W23G10	20	30-28	.05-.08	Gold 10µ"
MP28W23G15	MS28W23G15	20	30-28	.05-.08	Gold 15µ"
MP28W23G30	MS28W23G30	20	30-28	.05-.08	Gold 30µ"

Tools

Contact Extraction Tool, #20 (Ø 1.0) Contact

QXRT20

Hand Crimp Tool for Machined Contacts

MFX-3959

Pneumatic Crimp Tool for Machined Contact

MFX-3960

Shell Size: 12 **Number of Contacts: 4 (2+2)** **Contact Size: 2-20/2-2.5mm**
Sealing: IP67 / IP69k **Salt Spray: 500h**

Contacts Stamped & Formed

Crimp Contacts, Stamped & Formed

Part Number		Contact Size	AWG	Wire Range (mm²)	Plating
Male	Female				
SP12A1T	SS12A1T	2.5mm	14-12	2.5-3.5	Tin
SP20W2F	SS20W2F	20	22-20	.34-.50	Gold Flash
SP20W2G5	SS20W2G5	20	22-20	.34-.50	Gold 5µ"
SP20W2G10	SS20W2G10	20	22-20	.34-.50	Gold 10µ"
SP20W2G15	SS20W2G15	20	22-20	.34-.50	Gold 15µ"
SP20W2G30	SS20W2G30	20	22-20	.34-.50	Gold 30µ"
SP24W2F	SS24W2F	20	26-24	.14-.25	Gold Flash
SP24W2G5	SS24W2G5	20	26-24	.14-.25	Gold 5µ"
SP24W2G10	SS24W2G10	20	26-24	.14-.25	Gold 10µ"
SP24W2G15	SS24W2G15	20	26-24	.14-.25	Gold 15µ"
SP24W2G30	SS24W2G30	20	26-24	.14-.25	Gold 30µ"
SP28W2F	SS28W2F	20	30-28	.05-.08	Gold Flash
SP28W2G5	SS28W2G5	20	30-28	.05-.08	Gold 5µ"
SP28W2G10	SS28W2G10	20	30-28	.05-.08	Gold 10µ"
SP28W2G15	SS28W2G15	20	30-28	.05-.08	Gold 15µ"
SP28W2G30	SS28W2G30	20	30-28	.05-.08	Gold 30µ"

Tools

Extraction Tool 2.5mm Contact

QXRT12S

Contact Extraction Tool, #20 (Ø 1.0) Contact

QXRT20

Hand Tool, Stamped & Formed Contact, 2.5 mm

MFX-3962

Hand Tool for Stamped & Formed Contact, Size 20, 20-28AWG

MFX-3958

Crimp Die for Stamped & Formed Contact

MFX-3957

STEP 1 Choose Receptacle Style	STEP 2 Choose Plug Style

SEE TABLE ON NEXT PAGE FOR PART DETAILS

Jam Nut Receptacles

RTS714N2P03

RTS714N2S03

RTS714N2PHEC03

Square Flange Receptacles

RTS014N2P03

RTS014N2S03

RTS014N2PHEC03

RTS014N2SHEC03

Plugs

RTS6BS14N2P03

RTS6BS14N2S03

RTS6BS14N2PHEC03

RTS6BS14N2SHEC03

CONTACTS SOLD SEPARATELY SEE PAGE 96

Shell Size: 14 **Number of Contacts: 4 (2+2)** **Contact Size: 2-16/2-2.5mm**
Sealing: IP67 / IP69k **Salt Spray: 500h**

eco|mate® Aquarius Standard Products

- Suitable For Indoor and Outdoor Applications
- EMI/RMI Shielding Capability with Appropriate Backshell
- Operating Temperature: -40°C to +125°C
- 500 Mating Cycles
- Contacts and Cord Grips Ordered Separately
- UL ECBT2 Certified*

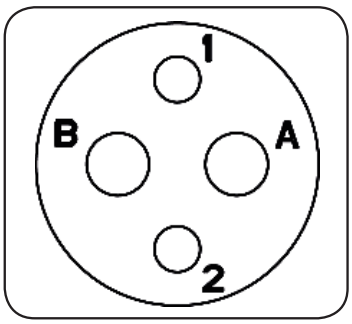

Insert Arrangement
Pin (Male) Faceview

Connector Part Numbers - Receptacles

PART NO#	Description	Temperature Range	Figure Drawing
RTS714N2P03	Receptacle, jam nut, 2+2 positions, size 14, pin contact, silicone rubber seal	-40 to 125°C	1
RTS714N2PHEC03	Receptacle, jam nut, 2+2 positions, size 14, pin contact, silicone rubber seal, endcap	-40 to 125°C	3
RTS714N2S03	Receptacle, jam nut, 2+2 positions, size 14, socket contact, silicone rubber seal	-40 to 125°C	2
RTS0114N2P03	Receptacle, square flange, 4 (2+2) positions, size 14, pin contact, silicone rubber seal	-40 to 125°C	4
RTS0114N2PHEC03	Receptacle, square flange, 4 (2+2) positions, size 14, pin contact, silicone rubber seal, endcap	-40 to 125°C	6
RTS0114N2S03	Receptacle, square flange, 4 (2+2) positions, size 14, socket contact, silicone rubber seal	-40 to 125°C	5
RTS0114N2SHEC03	Receptacle, square flange, 4 (2+2) positions, size 14, socket contact, silicone rubber seal, endcap	-40 to 125°C	7

Connector Part Numbers - Plugs

PART NO#	Description	Temperature Range	Figure Drawing
RTS6BS14N2P03	Straight plug with cord grip, 2+2 positions, size 14, pin contact, silicone rubber seal	-40 to 125°C	8
RTS6BS14N2PHEC03	Straight plug with end cap, 2+2 positions, size 14, pin contact, silicone rubber seal	-40 to 125°C	10
RTS6BS14N2S03	Straight plug with cord grip, 2+2 positions, size 14, socket contact, silicone rubber seal	-40 to 125°C	9
RTS6BS14N2SHEC03	Straight plug with end cap, 2+2 positions, size 14, socket contact, silicone rubber seal	-40 to 125°C	11

Contacts supplied separately see page 96

Shell Size: 14 Number of Contacts: 4 (2+2) Contact Size: 2-16/2-2.5mm
Sealing: IP67 / IP69k Salt Spray: 500h

Dimensions Jam Nut Receptacles

Jam Nut Receptacle

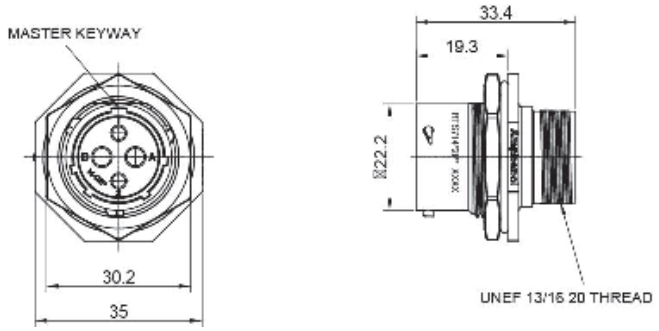

Male Figure 1 RTS714N2P03

Jam Nut Receptacle

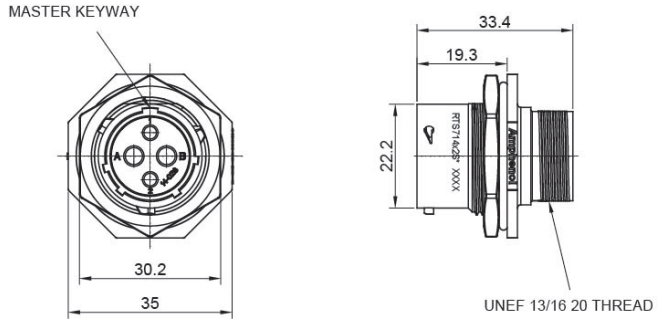

Female Figure 2 RTS714N2S03

Jam Nut Receptacle with Endcap

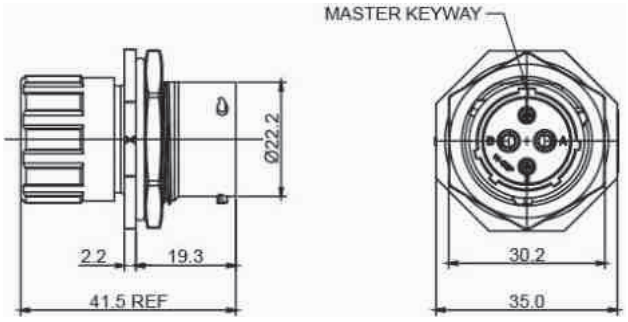

Male Figure 3 RTS714N2PHEC03

Shell Size: 14 **Number of Contacts: 4 (2+2)** **Contact Size: 2-16/2-2.5mm**
Sealing: IP67 / IP69k **Salt Spray: 500h**

Dimensions Square Flange Receptacles

Square Flange Receptacle

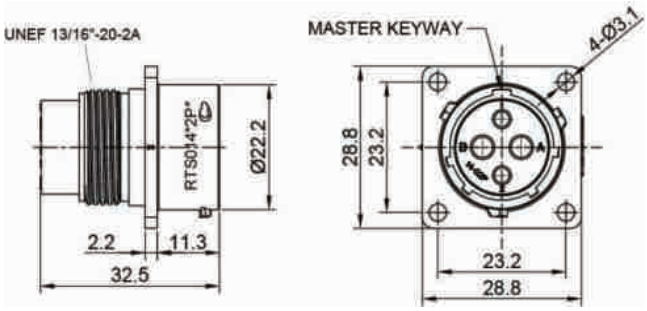

Male Figure 4 RTS014N2P03

Square Flange Receptacle

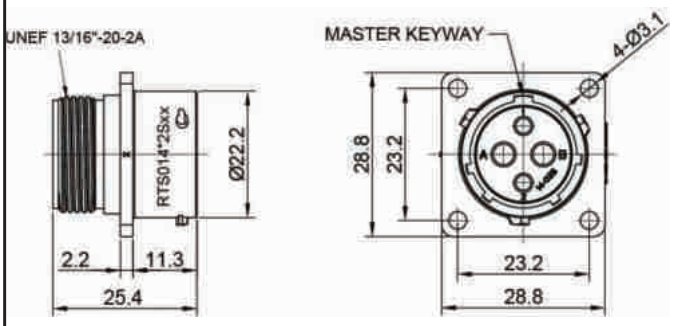

Female Figure 5 RTS014N2S03

Sqaure Flange Receptacle with Endcap

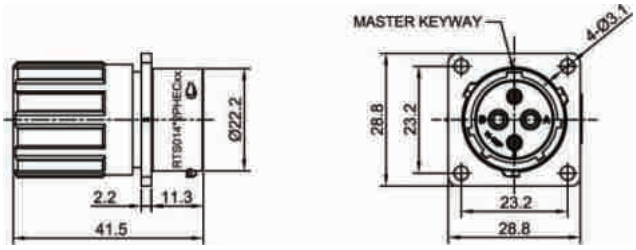

Male Figure 6 RTS014N2PHEC03

Square Flange Receptacle with Endcap

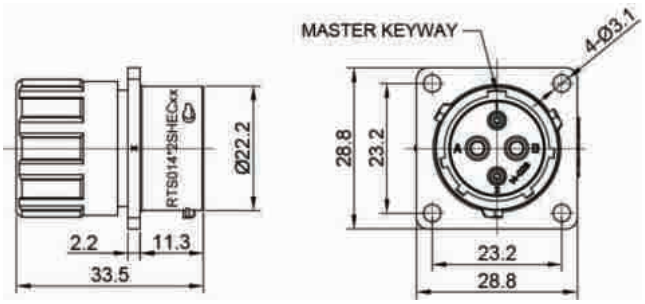

Female Figure 7 RTS014N2SHEC03

Shell Size: 14 **Number of Contacts: 4 (2+2)** **Contact Size: 2-16/2-2.5mm**
Sealing: IP67 / IP69k **Salt Spray: 500h**

Dimensions / Plugs

Plug

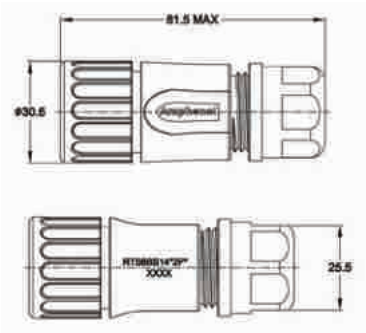

Male Figure 8 RTS6BS14N2P03

Plug

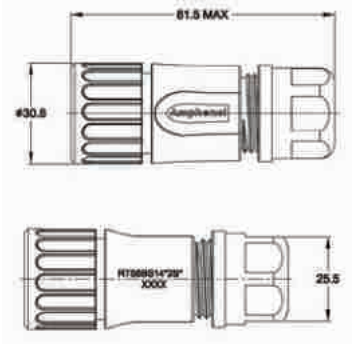

Female Figure 9 RTS6BS14N2S03

Plug with Endcap

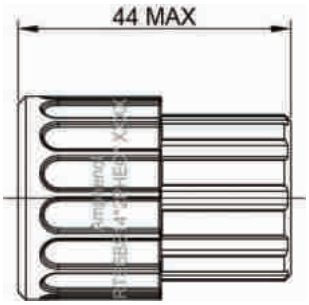

Male Figure 10 RTS6BS14N2PHEC03

Plug with Endcap

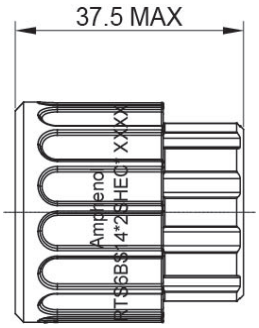

Female Figure 11 RTS6BS14N2SHEC03

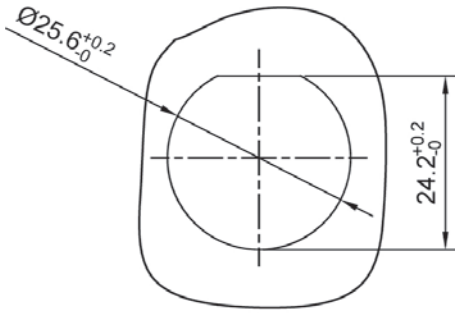

PANEL CUTOUT REFERENCE
THICKNESS:3.2MM (MAX)

Shell Size: 14 **Number of Contacts: 4 (2+2)** **Contact Size: 2-16/2-2.5mm**
Sealing: IP67 / IP69k **Salt Spray: 500h**

Accessories

Dust Cap for Receptacle, Size 14

RTS014DCG

Dust Cap for Plug, Size 14

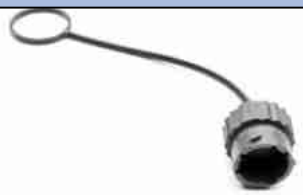

RTS614NDCG

Sealing Plug, Size 2.5mm

A114017

Sealing Plug, Size 16

A114017-SR

Coding Color Ring, Yellow, Size 14

RTS14CCRY

Coding Color Ring, Green, Size 14

RTS14CCRG

Coding Color Ring, Red, Size 14

RTS14CCRR

Shell Size: 14 **Number of Contacts: 4 (2+2)** **Contact Size: 2-16/2-2.5mm**
Sealing: IP67 / IP69k **Salt Spray: 500h**

Contacts Machined

Machined Contacts

Crimp Contacts, Machined

Part Number		Contact Size	AWG	Wire Range (mm²)	Plating
Male	Female				
MP14M23F	MS14M23F	16	14	2.0-2.5	Gold Flash
MP14M23G5	MS14M23G5	16	14	2.0-2.5	Gold 5µ"
MP14M23G10	MS14M23G10	16	14	2.0-2.5	Gold 10µ"
MP14M23G15	MS14M23G15	16	14	2.0-2.5	Gold 15µ"
MP14M23G30	MS14M23G30	16	14	2.0-2.5	Gold 30µ"
MP16M23F	MS16M23F	16	18-16	.75-1.5	Gold Flash
MP16M23G5	MS16M23G5	16	18-16	.75-1.5	Gold 5µ"
MP16M23G10	MS16M23G10	16	18-16	.75-1.5	Gold 10µ"
MP16M23G15	MS16M23G15	16	18-16	.75-1.5	Gold 15µ"
MP16M23G30	MS16M23G30	16	18-16	.75-1.5	Gold 30µ"
MP20M23F	MS20M23F	16	22-20	.34-.50	Gold Flash
MP20M23G5	MS20M23G5	16	22-20	.34-.50	Gold 5µ"
MP20M23G10	MS20M23G10	16	22-20	.34-.50	Gold 10µ"
MP20M23G15	MS20M23G15	16	22-20	.34-.50	Gold 15µ"
MP20M23G30	MS20M23G30	16	22-20	.34-.50	Gold 30µ"
MP24M23F	MS24M23F	16	26-24	.14-.25	Gold Flash
MP24M23G5	MS24M23G5	16	26-24	.14-.25	Gold 5µ"
MP24M23G10	MS24M23G10	16	26-24	.14-.25	Gold 10µ"
MP24M23G15	MS24M23G15	16	26-24	.14-.25	Gold 15µ"
MP24M23G30	MS24M23G30	16	26-24	.14-.25	Gold 30µ"

Tools

Contact Extraction Tool, #16 (Ø 1.6) Contact

QXRT16

Hand Crimp Tool for Machined Contacts

MFX-3959

Pneumatic Crimp Tool for Machined Contacts

MFX-3960

Shell Size: 14 **Number of Contacts: 4 (2+2)** **Contact Size: 2-16/2-2.5mm**
Sealing: IP67 / IP69k **Salt Spray: 500h**

Contacts Stamped &Formed

Stamped & Formed Contacts

2.5mm

Crimp Contacts, Stamped & Formed

Part Number		Contact Size	AWG	Wire Range (mm²)	Plating
Male	Female				
SP12A1T	SS12A1T	2.5mm	14-12	2.5-3.5	Tin
SP14M2F	SS14M2F	16	14	2.0-2.5	Gold Flash
SP14M2G5	SS14M2G5	16	14	2.0-2.5	Gold 5µ"
SP14M2G10	SS14M2G10	16	14	2.0-2.5	Gold 10µ"
SP14M2G15	SS14M2G15	16	14	2.0-2.5	Gold 15µ"
SP14M2G30	SS14M2G30	16	14	2.0-2.5	Gold 30µ"
SP16M2F	SS16M2F	16	18-16	.75-1.5	Gold Flash
SP16M2G5	SS16M2G5	16	18-16	.75-1.5	Gold 5µ"
SP16M2G10	SS16M2G10	16	18-16	.75-1.5	Gold 10µ"
SP16M2G15	SS16M2G15	16	18-16	.75-1.5	Gold 15µ"
SP16M2G30	SS16M2G30	16	18-16	.75-1.5	Gold 30µ"
SP20M2F	SS20M2F	16	22-20	.34-.50	Gold Flash
SP20M2G5	SS20M2G5	16	22-20	.34-.50	Gold 5µ"
SP20M2G10	SS20M2G10	16	22-20	.34-.50	Gold 10µ"
SP20M2G15	SS20M2G15	16	22-20	.34-.50	Gold 15µ"
SP20M2G30	SS20M1G30	16	22-20	.34-.50	Gold 30µ"
SP24M2F	SS24M2F	16	26-24	.14-.25	Gold Flash
SP24M2G5	SS24M2G5	16	26-24	.14-.25	Gold 5µ"
SP24M2G10	SS24M2G10	16	26-24	.14-.25	Gold 10µ"
SP24M2G15	SS24M2G15	16	26-24	.14-.25	Gold 15µ"
SP24M2G30	SS24M2G30	16	26-24	.14-.25	Gold 30µ"

Tools

Extraction Tool 2.5mm Contact

QXRT12S

Contact Extraction Tool, #16 (Ø 1.6) Contact

QXRT16

Hand Tool, Stamped & Formed Contact, 2.5 mm

MFX-3962

Hand Tool, Stamped & Formed Contact, Size16, 20-14AWG

MFX-3954

Crimp Die for Stamped & Formed Contact

MFX-3957

STEP 1
Choose Receptacle Style

STEP 2
Choose Plug Style

Jam Nut Receptacles

RTS710N6P03

RTS710N6S03

RTS710N6PHEC03

Square Flange Receptacles

RTS010N6P03

RTS010N6S03

RTS010N6PHEC03

RTS010N6SHEC03

Plug

RTS6BS10N6P03

RTS6BS10N6S03

RTS6BS10N6PHEC03

RTS6BS10N6SHEC03

SEE TABLE ON NEXT PAGE FOR PART DETAILS

CONTACTS SOLD SEPARATELY SEE PAGE 104

Shell Size: 10 Number of Contacts: 6 Contact Size: 20
Sealing: IP67 / IP69k Salt Spray: 500h

eco|mate® Aquarius Standard Products

- Suitable For Indoor and Outdoor Applications
- EMI/RMI Shielding Capability with Appropriate Backshell
- Operating Temperature: -40°C to +125°C
- 500 Mating Cycles
- Contacts and Cord Grips Ordered Separately
- UL ECBT2 Certified*

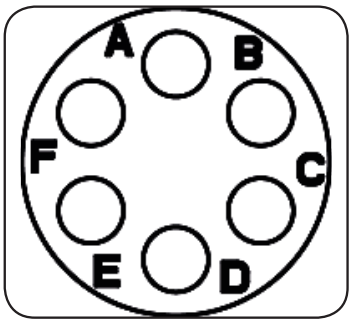

Insert Arrangement
Pin (Male) Faceview

Connector Part Numbers - Receptacles

PART NO#	Description	Temperature Range	Figure Drawings
RTS710N6P03	Receptacle, jam nut, 6 positions, size 10, pin contact , silicone rubber seal	-40 to 125°C	1
RTS710N6S03	Receptacle, jam nut, 6 positions, size 10, socket contact , silicone rubber seal	-40 to 125°C	2
RTS710N6PHEC03	Receptacle, jam nut, 6 positions, size 10, pin contact , silicone rubber seal, with endcap	-40 to 125°C	3
RTS010N6P03	Receptacle, square flange, 6 positions, size 10, pin contact, silicone rubber seal	-40 to 125°C	4
RTS010N6PHEC03	Receptacle, square flange, 6 positions, size 10, pin contact, silicone rubber seal, endcap	-40 to 125°C	6
RTS010N6S03	Receptacle, square flange, 6 positions, size 10, socket contact, silicone rubber seal	-40 to 125°C	5
RTS010N6SHEC03	Receptacle, square flange, 6 positions, size 10, socket contact, silicone rubber seal, endcap	-40 to 125°C	7

Connector Part Numbers - Plugs

PART NO#	Description	Temperature Range	Figure Drawings
RTS6BS10N6P03	Straight plug with cord grip, 6 positions, size 10, pin contact , silicone rubber seal	-40 to 125°C	8
RTS6BS10N6PHEC03	Straight plug with endcap, 6 positions, size 10, pin contact , silicone rubber seal	-40 to 125°C	10
RTS6BS10N6S03	Straight plug with cord grip, 6 positions, size 10, socket contact , silicone rubber seal	-40 to 125°C	9
RTS6BS10N6SHEC03	Straight plug with endcap, 6 positions, size 10, socket contact , silicone rubber seal	-40 to 125°C	11

Contacts supplied separately see page 104

Shell Size: 10 **Number of Contacts: 6** **Contact Size: 20**
Sealing: IP67 / IP69k **Salt Spray: 500h**

Dimensions Jam Nut

Jam Nut Receptacle

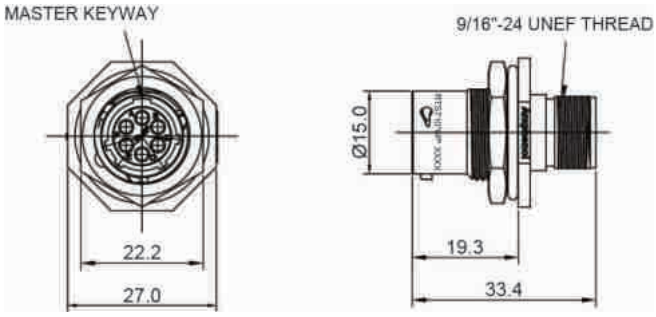

Male Figure 1 RTS710N6P03

Jam Nut Receptacle

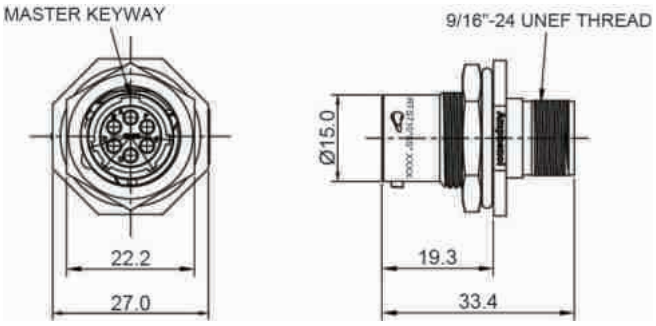

Female Figure 2 RTS710N6S03

Jam Nut Receptacle with Endcap

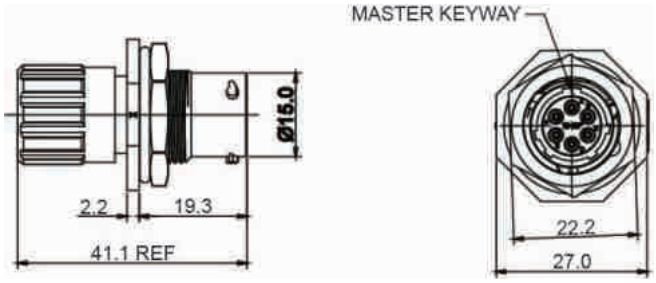

Male Figure 3 RTS710N6PHEC03

Shell Size: 10 **Number of Contacts: 6** **Contact Size: 20**
Sealing: IP67 / IP69k **Salt Spray: 500h**

Dimensions Square Flange Receptacles

Square Flange Receptacle

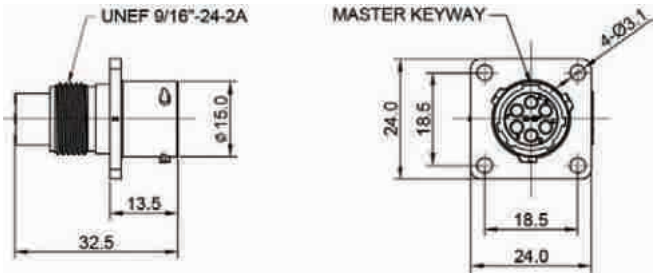

Male Figure 4 RTS010N6P03

Square Flange Receptacle

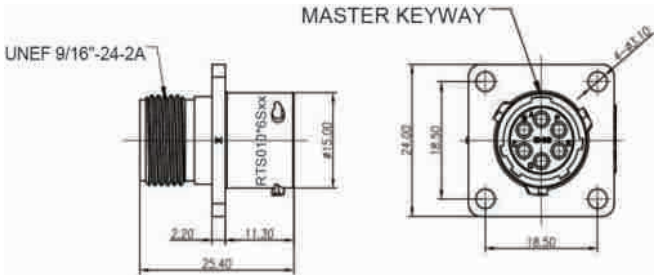

Female Figure 5 RTS010N6S03

Square Flange Receptacle with Endcap

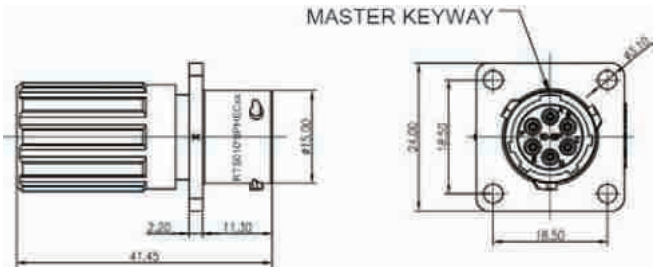

Male Figure 6 RTS010N6PHEC03

Square Flange Receptacle with Endcap

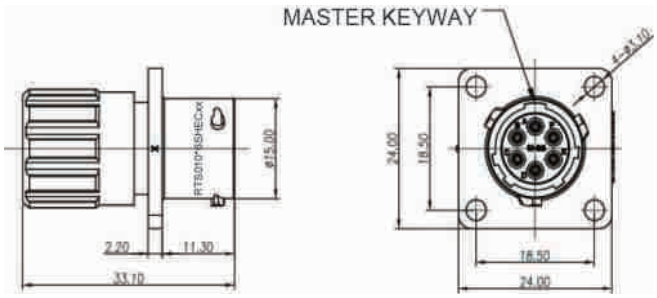

Female Figure 7 RTS010N6SHEC03

Shell Size: 10 **Number of Contacts: 6** **Contact Size: 20**
Sealing: IP67 / IP69k **Salt Spray: 500h**

Dimensions Plugs

Plug

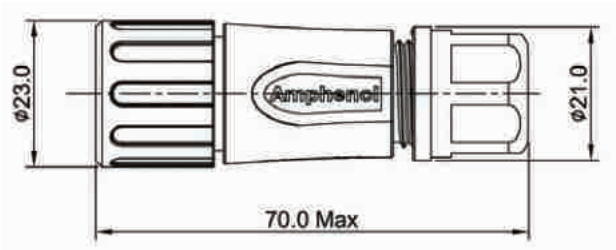

Male Figure 8 RTS6BS10N6P03

Plug

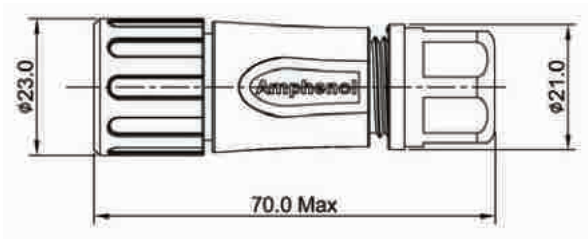

Female Figure 9 RTS6BS10N6S03

Plug with Endcap

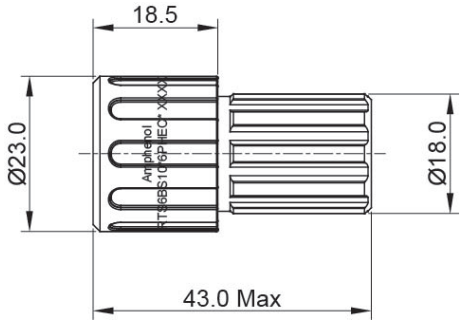

Male Figure 10 RTS6BS10N6PHEC03

Plug with Endcap

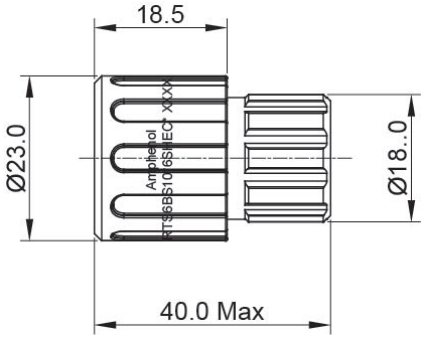

Female Figure 11 RTS6BS10N6SHEC03

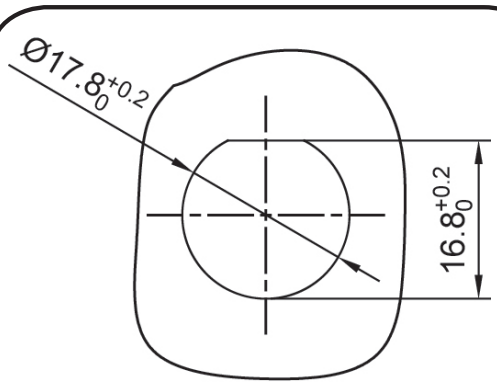

PANEL CUT OUT REFERENCE

Shell Size: 10 Number of Contacts: 6 Contact Size: 20
Sealing: IP67 / IP69k Salt Spray: 500h

Accessories

Dust Cap for Receptacle, Size 10

RTS010DCG

Dust Cap for Plug, Size 10

RTS610NDCG

Sealing Plug, Size 20

AT13-204-2005

Coding Color Ring, Yellow, Size 10

RTS10CCRY

Coding Color Ring, Green, Size 10

RTS10CCRG

Coding Color Ring, Red, Size 10

RTS10CCRR

Shell Size: 10 **Number of Contacts: 6** **Contact Size: 20**
Sealing: IP67 / IP69k **Salt Spray: 500h**

Contacts Machined

Machined Contacts

Crimp Contacts, Machined

Part Number		AWG	Wire Ranget (mm²)	Plating
Male	Female			
MP20W23F	MS20W23F	22-20	.34-.50	Gold Flash
MP20W23G5	MS20W23G5	22-20	.34-.50	Gold 5µ"
MP20W23G10	MS20W23G10	22-20	.34-.50	Gold 10µ"
MP20W23G15	MS20W23G15	22-20	.34-.50	Gold 15µ"
MP20W23G30	MS20W23G30	22-20	.34-.50	Gold 30µ"
MP24W23F	MS24W23F	26-24	.13-.25	Gold Flash
MP24W23G5	MS24W23G5	26-24	.13-.25	Gold 5µ"
MP24W23G10	MS24W23G10	26-24	.13-.25	Gold 10µ"
MP24W23G15	MS24W23G15	26-24	.13-.25	Gold 15µ"
MP24W23G30	MS24W23G30	26-24	.13-.25	Gold 30µ"
MP28W23F	MS28W23F	30-28	.05-.08	Gold Flash
MP28W23G5	MS28W23G5	30-28	.05-.08	Gold 5µ"
MP28W23G10	MS28W23G10	30-28	.05-.08	Gold 10µ"
MP28W23G15	MS28W23G15	30-28	.05-.08	Gold 15µ"
MP28W23G30	MS28W23G30	30-28	.05-.08	Gold 30µ"

Tools

Contact Extraction Tool, #20 (Ø 1.6) Contact

QXRT20

Hand Crimp Tool for Machined Contacts

MFX-3959

Pneumatic Crimp Tool for Machined Contact

MFX-3960

Shell Size: 10 **Number of Contacts: 6** **Contact Size: 20**
Sealing: IP67 / IP69k **Salt Spray: 500h**

Contacts Stamped & Formed

Stamped & Formed Contacts

Crimp Contacts, Stamped & Formed

Part Number		AWG	Wire Range (mm²)	Plating
Male	Female			
SP20W2F	SS20W2F	22-20	.34-.50	Gold Flash
SP20W2G5	SS20W2G5	22-20	.34-.50	Gold 5µ"
SP20W2G10	SS20W2G10	22-20	.34-.50	Gold 10µ"
SP20W2G15	SS20W2G15	22-20	.34-.50	Gold 15µ"
SP20W2G30	SS20W2G30	22-20	.34-.50	Gold 30µ"
SP24W2F	SS24W2F	26-24	.14-.25	Gold Flash
SP24W2G5	SS24W2G5	26-24	.14-.25	Gold 5µ"
SP24W2G10	SS24W2G10	26-24	.14-.25	Gold 10µ"
SP24W2G15	SS24W2G15	26-24	.14-.25	Gold 15µ"
SP24W2G30	SS24W2G30	26-24	.14-.25	Gold 30µ"
SP28W2F	SS28W2F	30-28	.05-.08	Gold Flash
SP28W2G5	SS28W2G5	30-28	.05-.08	Gold 5µ"
SP28W2G10	SS28W2G10	30-28	.05-.08	Gold 10µ"
SP28W2G15	SS28W2G15	30-28	.05-.08	Gold 15µ"
SP28W2G30	SS28W2G30	30-28	.05-.08	Gold 30µ"

Tools

Contact Extraction Tool, #20 (Ø 1.6) Contact

QXRT20

Hand Tool, Stamped & Formed Contact, Size 20 20-14AWG

MFX-3958

Crimp Die for Stamped & Formed Contact

MFX-3957

STEP 1 Choose Receptacle Style	STEP 2 Choose Plug Style

Jam Nut Receptacles

RTS714N7P03

RTS714N7S03

Square Flange Receptacles

RTS014N7P03

RTS014N7S03

Plug

RTS6BS14N7P03

RTS6BS14N7S03

SEE TABLE ON NEXT PAGE FOR PART DETAILS

CONTACTS SOLD SEPARATELY SEE PAGE 110

Shell Size: 14 Number of Contacts: 7 Contact Size: 16
Sealing: IP67 / IP69k Salt Spray: 500h

eco|mate® Aquarius Standard Products

- Suitable For Indoor and Outdoor Applications
- EMI/RMI Shielding Capability with Appropriate Backshell
- Operating Temperature: -40°C to +125°C
- 500 Mating Cycles
- Contacts and Cord Grips Ordered Separately
- UL ECBT2 Certified*

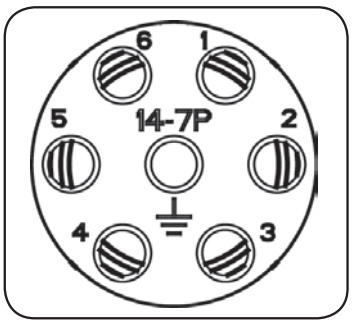

Insert Arrangement
Pin (Male) Faceview

Connector Part Numbers - Receptacles

PART NO#	Description	Temperature Range	Figure Drawing
RTS714N7P03	Receptacle, jam nut, 7 positions, size 14, pin contact, silicone rubber seal	-40 to 125°C	1
RTS714N7S03	Receptacle, jam nut, 7 positions, size 14, socket contact, silicone rubber seal	-40 to 125°C	2
RTS014N7P03	Receptacle, square flange, 7 positions, size 14, pin contact, silicone rubber seal	-40 to 125°C	3
RTS014N7S03	Receptacle, square flange, 7 positions, size 14, socket contact, silicone rubber seal	-40 to 125°C	4

Connector Part Numbers - Plugs

PART NO#	Description	Temperature Range	Figure Drawing
RTS6BS14N7P03	Straight plug with cord grip, 7 positions, size 14, pin contact, silicone rubber seal	-40 to 125°C	5
RTS6BS14N7S03	Straight plug with cord grip, 7 positions, size 14, socket contact, silicone rubber seal	-40 to 125°C	6

Contacts supplied separately see page 110

Shell Size: 14 Number of Contacts: 7 Contact Size: 16
Sealing: IP67 / IP69k Salt Spray: 500h

Dimensions Jam Nut and Square Flange Receptacles

Jam Nut Receptacle

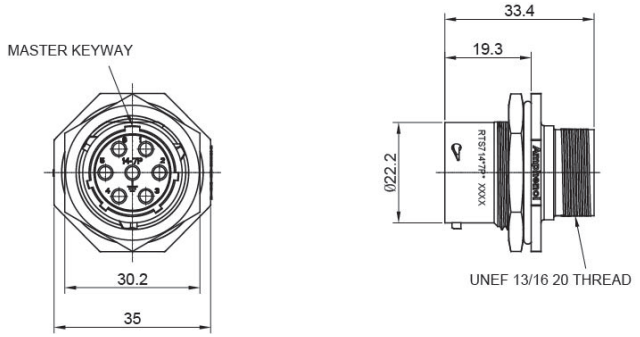

Male Figure 1 RTS714N7P03

Jam Nut Receptacle

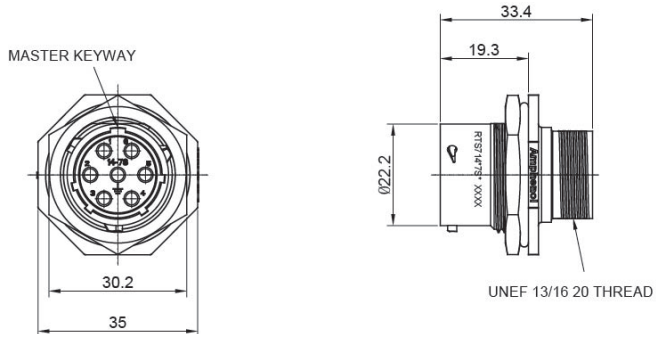

Female Figure 2 RTS714N7S03

Sqaur Flange Receptacle

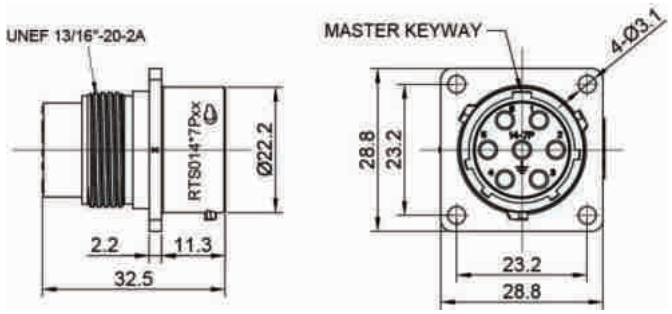

Male Figure 3 RTS014N7P03

Jam Nut Receptacle

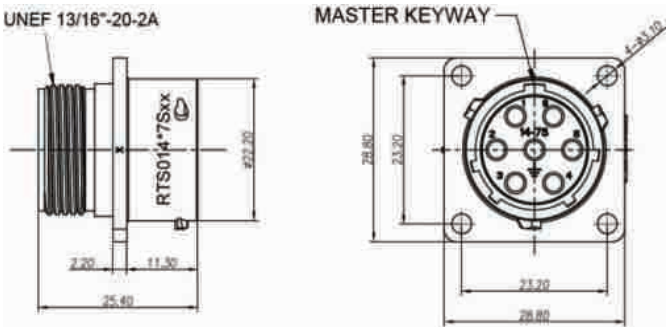

Female Figure 4 RTS014N7S03

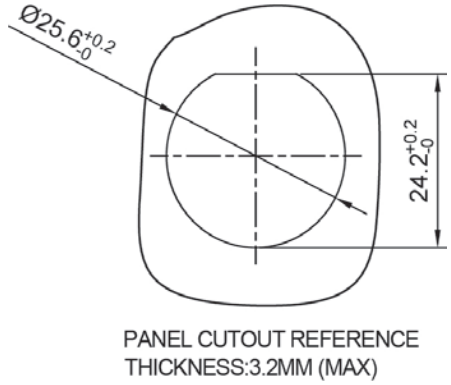

Shell Size: 14 **Number of Contacts: 7** **Contact Size: 16**
Sealing: IP67 / IP69k **Salt Spray: 500h**

Dimensions Plugs

Plug

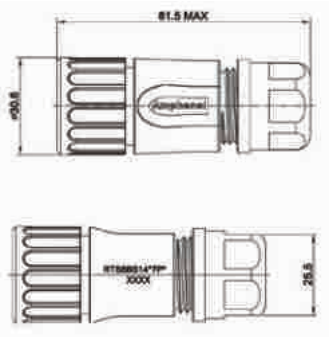

Male Figure 5 RTS6BS14N7P03

Plug

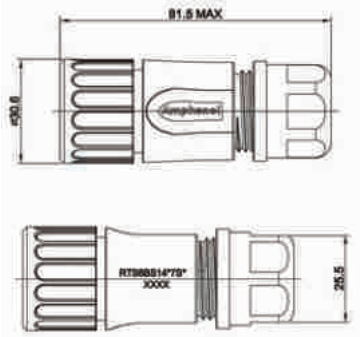

Female Figure 6 RTS6BS14N7S03

Accessories

Dust Cap for Receptacle, Size 14

RTS014DCG

Dust Cap for Plug, Size 14

RTS614NDCG

Sealing Plug, Size 16

A114017-SR

Coding Color Ring, Yellow, Size 14

RTS14CCRY

Coding Color Ring, Green, Size 14

RTS14CCRG

Coding Color Ring, Red, Size 14

RTS14CCRR

Shell Size: 14 **Number of Contacts: 7** **Contact Size: 16**
Sealing: IP67 / IP69k **Salt Spray: 500h**

Contacts

Machined Contacts

Crimp Contacts, Machined

Part Number		AWG	Wire Range (mm²)	Plating
Male	Female			
MP14M23F	MS14M23F	14	2.0-2.5	Gold Flash
MP14M23G5	MS14M23G5	14	2.0-2.5	Gold 5µ"
MP14M23G10	MS14M23G10	14	2.0-2.5	Gold 10µ"
MP14M23G15	MS14M23G15	14	2.0-2.5	Gold 15µ"
MP14M23G30	MS14M23G30	14	2.0-2.5	Gold 30µ"
MP16M23F	MS16M23F	18-16	.75-1.5	Gold Flash
MP16M23G5	MS16M23G5	18-16	.75-1.5	Gold 5µ"
MP16M23G10	MS16M23G10	18-16	.75-1.5	Gold 10µ"
MP16M23G15	MS16M23G15	18-16	.75-1.5	Gold 15µ"
MP16M23G30	MS16M23G30	18-16	.75-1.5	Gold 30µ"
MP20M23F	MS20M23F	22-20	.34-.50	Gold Flash
MP20M23G5	MS20M23G5	22-20	.34-.50	Gold 5µ"
MP20M23G10	MS20M23G10	22-20	.34-.50	Gold 10µ"
MP20M23G15	MS20M23G15	22-20	.34-.50	Gold 15µ"
MP20M23G30	MS20M23G30	22-20	.34-.50	Gold 30µ"
MP24M23F	MS24M23F	26-24	.14-.25	Gold Flash
MP24M23G5	MS24M23G5	26-24	.14-.25	Gold 5µ"
MP24M23G10	MS24M23G10	26-24	.14-.25	Gold 10µ"
MP24M23G15	MS24M23G15	26-24	.14-.25	Gold 15µ"
MP24M23G30	MS24M23G30	26-24	.14-.25	Gold 30µ"

Tools

Contact Extraction Tool, #16 (Ø 1.6) Contact

QXRT16

Hand Crimp Tool for Machined Contacts

MFX3959

Pneumatic Crimp Tool for Machined Contacts

MFX3960

Shell Size: 14 **Number of Contacts: 7** **Contact Size: 16**
Sealing: IP67 / IP69k **Salt Spray: 500h**

Contacts (con't)

Stamped & Formed Contacts

Crimp Contacts, Stamped & Formed

Part Number		AWG	Wire Range (mm²)	Plating
Male	Female			
SP14M2F	SS14M2F	14	2.0-2.5	Gold Flash
SP14M2G5	SS14M2G5	14	2.0-2.5	Gold 5µ"
SP14M2G10	SS14M2G10	14	2.0-2.5	Gold 10µ"
SP14M2G15	SS14M2G15	14	2.0-2.5	Gold 15µ"
SP14M2G30	SS14M2G30	14	2.0-2.5	Gold 30µ"
SP16M2F	SS16M2F	18-16	.75-1.5	Gold Flash
SP16M2G5	SS16M2G5	18-16	.75-1.5	Gold 5µ"
SP16M2G10	SS16M2G10	18-16	.75-1.5	Gold 10µ"
SP16M2G15	SS16M2G15	18-16	.75-1.5	Gold 15µ"
SP16M2G30	SS16M2G30	18-16	.75-1.5	Gold 30µ"
SP20M2F	SS20M2F	22-20	.34-.50	Gold Flash
SP20M2G5	SS20M2G5	22-20	.34-.50	Gold 5µ"
SP20M2G10	SS20M2G10	22-20	.34-.50	Gold 10µ"
SP20M2G15	SS20M2G15	22-20	.34-.50	Gold 15µ"
SP20M2G30	SS20M1G30	22-20	.34-.50	Gold 30µ"
SP24M2F	SS24M2F	26-24	.14-.25	Gold Flash
SP24M2G5	SS24M2G5	26-24	.14-.25	Gold 5µ"
SP24M2G10	SS24M2G10	26-24	.14-.25	Gold 10µ"
SP24M2G15	SS24M2G15	26-24	.14-.25	Gold 15µ"
SP24M2G30	SS24M2G30	26-24	.14-.25	Gold 30µ"

Tools

Contact Extraction Tool, #16 (Ø 1.6) Contact

QXRT16

Hand Tool, Stamped & Formed Contact, Size16 20-14AWG

MFX-3954

Crimp Die for Stamped & Formed Contact

MFX-3957

STEP 1
Choose Receptacle Style

STEP 2
Choose Plug Style

SEE TABLE ON NEXT PAGE FOR PART DETAILS

CONTACTS SOLD SEPARATELY SEE PAGE 118

Jam Nut Receptacles

RTS712N8P03

RTS712N8S03

RTS712N8PHEc03

Square Flange Receptacles

RTS012N8P03

RTS012N8S03

RTS012N8PHEC03

RTS012N8SHEC03

Plugs

RTS6BS12N8P03

RTS6BS12N8S03

RTS6BS12N8PHEC03

RTS6BS12N8SHEC03

Shell Size: 12 Number of Contacts: 8 Contact Size: 16
Sealing: IP67 / IP69k Salt Spray: 500h

eco|mate® Aquarius Standard Products

- Suitable For Indoor and Outdoor Applications
- EMI/RMI Shielding Capability with Appropriate Backshell
- Operating Temperature: -40°C to +125°C
- 500 Mating Cycles
- Contacts and Cord Grips Ordered Separately
- UL ECBT2 Certified*

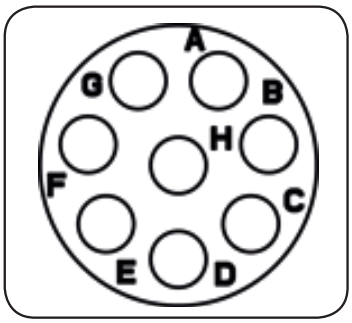

Insert Arrangement
Pin (Male) Faceview

Connector Part Numbers -Receptacles

PART NO#	Description	Temperature Range	Figure Drawing
RTS712N8P03	Receptacle, jam nut, 8 positions, size 12, pin contact, silicone rubber seal	-40 to 125°C	1
RTS712N8PHEC03	Receptacle, jam nut, 8 positions, size 12, pin contact, silicone rubber seal, endcap	-40 to 125°C	3
RTS712N8S03	Receptacle, jam nut, 8 positions, size 12, socket contact, silicone rubber seal	-40 to 125°C	2
RTS012N8P03	Receptacle, square flange, 8 positions, size 12, pin contact, silicone rubber seal	-40 to 125°C	4
RTS012N8PHEC03	Receptacle, square flange, 8 positions, size 12, pin contact, silicone rubber seal, endcap	-40 to 125°C	6
RTS012N8S03	Receptacle, square flange, 8 positions, size 12, socket contact, silicone rubber seal	-40 to 125°C	5
RTS012N8SHEC03	Receptacle, square flange, 8 positions, size 12, socket contact, silicone rubber seal, endcap	-40 to 125°C	7

Connector Part Numbers -Plugs

PART NO#	Description	Temperature Range	Figure Drawing
RTS6BS12N8P03	Straight plug with cord grip, 8 positions, size 12, pin contact, silicone rubber seal	-40 to 125°C	8
RTS6BS12N8PHEC03	Straight plug with end cap, 8 positions, size 12, pin contact, silicone rubber seal	-40 to 125°C	10
RTS6BS12N8S03	Straight plug with cord grip, 8 positions, size 12, socket contact, silicone rubber seal	-40 to 125°C	9
RTS6BS12N8SHEC03	Straight plug with end cap, 8 positions, size 12, socket contact, silicone rubber seal	-40 to 125°C	11

Contacts supplied separately see page 118

Shell Size: 12 **Number of Contacts: 8** **Contact Size: 16**
Sealing: IP67 / IP69k **Salt Spray: 500h**

Dimensions Jam Nut Receptacles

Jam Nut Receptacle

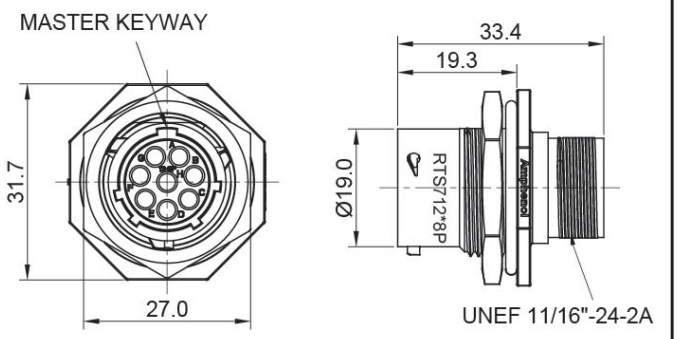

Male Figure 1 RTS712N8P03

Jam Nut Receptacle

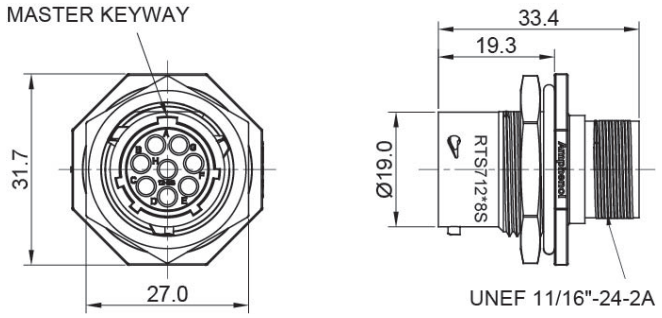

Female Figure 2 RTS712N8S03

Jam Nut Receptacle with Endcap

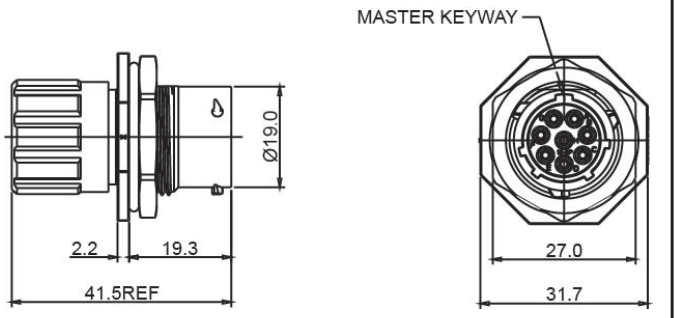

Male Figure 1 RTS712N8PHEC03

Shell Size: 12 **Number of Contacts: 8** **Contact Size: 16**
Sealing: IP67 / IP69k **Salt Spray: 500h**

Dimensions Square Flange Receptacles

Square Flange Receptacle

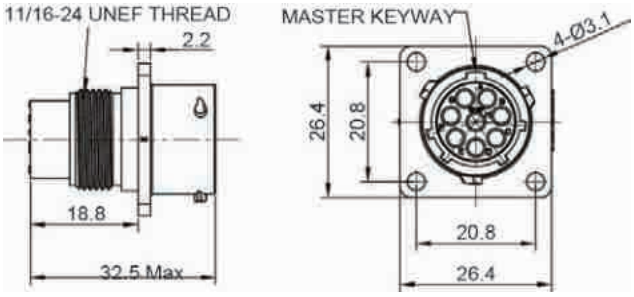

Male Figure 3 RTS012N8P03

Square Flange Receptacle

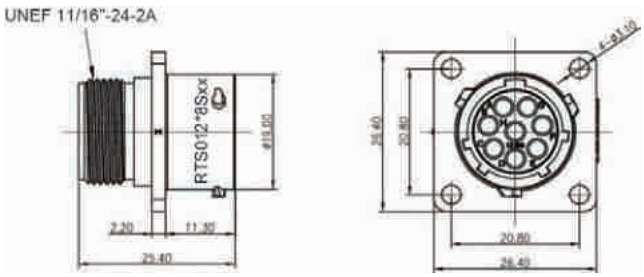

Female Figure 4 RTS012N8S03

Square Flange Receptacle with Endcap

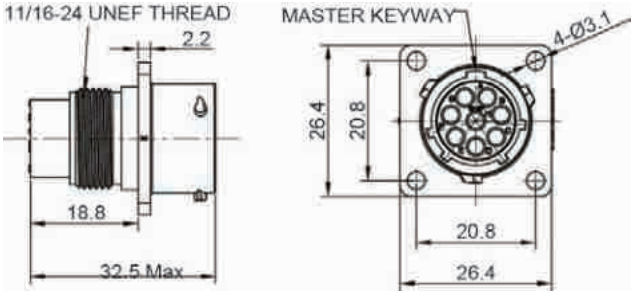

Male Figure 3 RTS012N8PHEC03

Square Flange Receptacle with Endcap

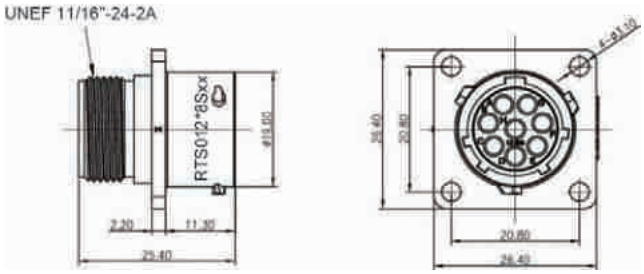

Female Figure 4 RTS012N8SHEC03

Shell Size: 12 **Number of Contacts: 8** **Contact Size: 16**
Sealing: IP67 / IP69k **Salt Spray: 500h**

Dimensions Plugs

Plug

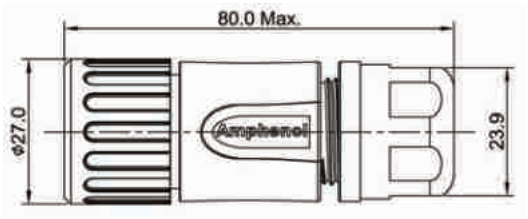

Male Figure 5 RTS6BS12N8P03

Plug

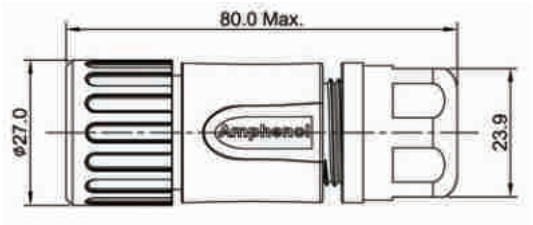

Female Figure 6 RTS6BS12N8S03

Plug with Endcap

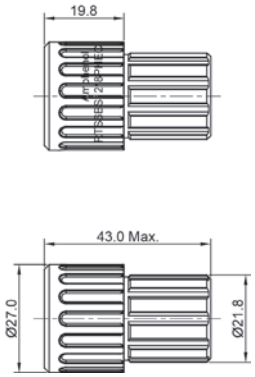

Male Figure 7 RTS6BS12N8PHEC03

Plug with Endcap

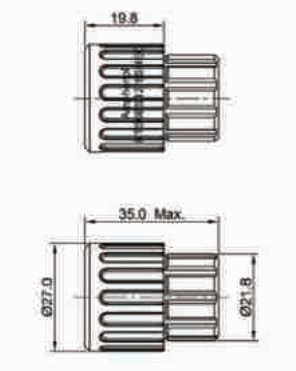

Female Figure 8 RTS6BS12N8SHEC03

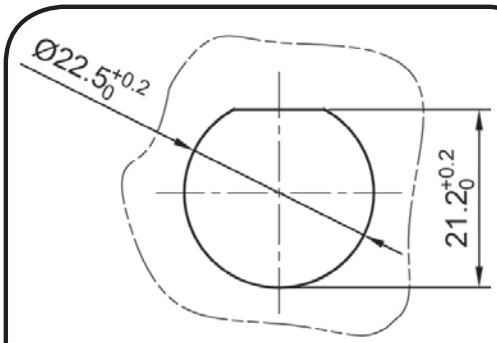

MOUNTING HOLE

Shell Size: 12 Number of Contacts: 8 Contact Size: 16
Sealing: IP67 / IP69k Salt Spray: 500h

Accessories

Dust Cap for Receptacle, Size 12

RTS012DCG

Dust Cap for Plug, Size 12

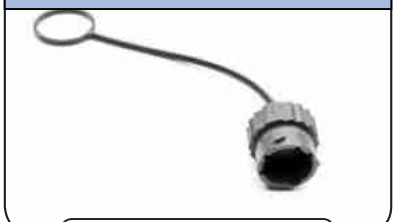

RTS612NDCG

Sealing Plug, Size 16

A114017-SR

Coding Color Ring, Yellow, Size 12

RTS12CCRY

Coding Color Ring, Green, Size 12

RTS12CCRG

Coding Color Ring, Red, Size 12

RTS12CCRR

Shell Size: 12 **Number of Contacts: 8** **Contact Size: 16**
Sealing: IP67 / IP69k **Salt Spray: 500h**

Contacts Machined

Machined Contacts

Crimp Contacts, Machined

Part Number		AWG	Wire Range (mm²)	Plating
Male	Female			
MP14M23F	MS14M23F	14	2.0-2.5	Gold Flash
MP14M23G5	MS14M23G5	14	2.0-2.5	Gold 5µ"
MP14M23G10	MS14M23G10	14	2.0-2.5	Gold 10µ"
MP14M23G15	MS14M23G15	14	2.0-2.5	Gold 15µ"
MP14M23G30	MS14M23G30	14	2.0-2.5	Gold 30µ"
MP16M23F	MS16M23F	18-16	.75-1.5	Gold Flash
MP16M23G5	MS16M23G5	18-16	.75-1.5	Gold 5µ"
MP16M23G10	MS16M23G10	18-16	.75-1.5	Gold 10µ"
MP16M23G15	MS16M23G15	18-16	.75-1.5	Gold 15µ"
MP16M23G30	MS16M23G30	18-16	.75-1.5	Gold 30µ"
MP20M23F	MS20M23F	22-20	.34-.50	Gold Flash
MP20M23G5	MS20M23G5	22-20	.34-.50	Gold 5µ"
MP20M23G10	MS20M23G10	22-20	.34-.50	Gold 10µ"
MP20M23G15	MS20M23G15	22-20	.34-.50	Gold 15µ"
MP20M23G30	MS20M23G30	22-20	.34-.50	Gold 30µ"
MP24M23F	MS24M23F	26-24	.14-.25	Gold Flash
MP24M23G5	MS24M23G5	26-24	.14-.25	Gold 5µ"
MP24M23G10	MS24M23G10	26-24	.14-.25	Gold 10µ"
MP24M23G15	MS24M23G15	26-24	.14-.25	Gold 15µ"
MP24M23G30	MS24M23G30	26-24	.14-.25	Gold 30µ"

Tools

Contact Extraction Tool, #16 (Ø 1.6) Contact

QXRT16

Hand Crimp Tool for Machined Contacts

MFX-3959

Pneumatic Crimp Tool for Machined Contacts

MFX-3960

Shell Size: 12 **Number of Contacts: 8** **Contact Size: 16**
Sealing: IP67 / IP69k **Salt Spray: 500h**

Contacts Stamped & Formed

Stamped & Formed Contacts

Crimp Contacts, Stamped & Formed

Part Number		AWG	Wire Range (mm²)	Plating
Male	Female			
SP14M2F	SS14M2F	14	2.0-2.5	Gold Flash
SP14M2G5	SS14M2G5	14	2.0-2.5	Gold 5µ"
SP14M2G10	SS14M2G10	14	2.0-2.5	Gold 10µ"
SP14M2G15	SS14M2G15	14	2.0-2.5	Gold 15µ"
SP14M2G30	SS14M2G30	14	2.0-2.5	Gold 30µ"
SP16M2F	SS16M2F	18-16	.75-1.5	Gold Flash
SP16M2G5	SS16M2G5	18-16	.75-1.5	Gold 5µ"
SP16M2G10	SS16M2G10	18-16	.75-1.5	Gold 10µ"
SP16M2G15	SS16M2G15	18-16	.75-1.5	Gold 15µ"
SP16M2G30	SS16M2G30	18-16	.75-1.5	Gold 30µ"
SP20M2F	SS20M2F	22-20	.34-.50	Gold Flash
SP20M2G5	SS20M2G5	22-20	.34-.50	Gold 5µ"
SP20M2G10	SS20M2G10	22-20	.34-.50	Gold 10µ"
SP20M2G15	SS20M2G15	22-20	.34-.50	Gold 15µ"
SP20M2G30	SS20M1G30	22-20	.34-.50	Gold 30µ"
SP24M2F	SS24M2F	26-24	.14-.25	Gold Flash
SP24M2G5	SS24M2G5	26-24	.14-.25	Gold 5µ"
SP24M2G10	SS24M2G10	26-24	.14-.25	Gold 10µ"
SP24M2G15	SS24M2G15	26-24	.14-.25	Gold 15µ"
SP24M2G30	SS24M2G30	26-24	.14-.25	Gold 30µ"

Tools

Contact Extraction Tool, #16 (Ø 1.6) Contact

QXRT16

Hand Tool, Stamped & Formed Contact, Size16, 20-14AWG

MFX-3954

Crimp Die for Stamped & Formed Contact

MFX-3957

STEP 1
Choose Receptacle Style

STEP 2
Choose Plug Style

Jam Nut Receptacles

RTS714N8P03

RTS714N8S03

RTS714N8PHEC03

Square Flange Receptacles

RTS014N8P03

RTS014N8S03

RTS014N8PHEC03

RTS014N8SHEC03

Plugs

RTS6BS14N8P03

RTS6BS14N8S03

RTS6BS14N8PHEC03

RTS6BS14N8SHEC03

SEE TABLE ON NEXT PAGE FOR PART DETAILS

CONTACTS SOLD SEPARATELY SEE PAGE 126

Shell Size: 14 **Number of Contacts: 8** **Contact Size: 16**

Sealing: IP67 / IP69k Salt Spray: 500h

eco|mate® Aquarius Standard Products

- Suitable For Indoor and Outdoor Applications
- EMI/RMI Shielding Capability with Appropriate Backshell
- Operating Temperature: -40°C to +125°C
- 500 Mating Cycles
- Contacts and Cord Grips Ordered Separately
- UL ECBT2 Certified*

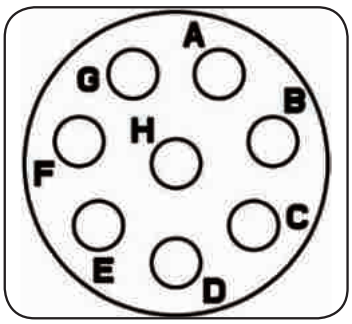

Insert Arrangement
Pin (Male) Faceview

Connector Part Numbers -Receptacles

PART NO#	Description	Temperature Range	Figure Drawing
RTS714N8P03	Receptacle, jam nut, 8 positions, size 14, pin contact, silicone rubber seal	-40 to 125°C	1
RTS714N8PHEC03	Receptacle, jam nut, 8 positions, size 14, pin contact, silicone rubber seal, with endcap	-40 to 125°C	3
RTS714N8S03	Receptacle, jam nut, 8 positions, size 14, for socket contact, silicone rubber seal	-40 to 125°C	2
RTS014N8P03	Receptacle, square flange, 8 positions, size 14, pin contact, silicone rubber seal	-40 to 125°C	4
RTS014N8PHEC03	Receptacle, square flange, 8 positions, size 14, pin contact, silicone rubber seal, endcap	-40 to 125°C	6
RTS014N8S03	Receptacle, square flange, 8 positions, size 14, socket contact, silicone rubber seal	-40 to 125°C	5
RTS014N8SHEC03	Receptacle, square flange, 8 positions, size 14, socket contact, silicone rubber seal, endcap	-40 to 125°C	7

Connector Part Numbers -Plugs

PART NO#	Description	Temperature Range	Figure Drawing
RTS6BS14N8P03	Straight plug with cord grip, 8 positions, size 14, pin contact, silicone rubber seal	-40 to 125°C	8
RTS6BS14N8PHEC03	Straight plug with end cap, 8 positions, size 14, pin contact, silicone rubber seal	-40 to 125°C	10
RTS6BS14N8S03	Straight plug with cord grip, 8 positions, size 14, socket contact, silicone rubber seal	-40 to 125°C	9
RTS6BS14N8SHEC03	Straight plug with end cap, 8 positions, size 14, socket contact, silicone rubber seal	-40 to 125°C	11

Contacts supplied separately see page 126

Shell Size: 14 **Number of Contacts: 8** **Contact Size: 16**

Sealing: IP67 / IP69k Salt Spray: 500h

Dimensions Jam Nut Receptacles

Jam Nut Receptacle

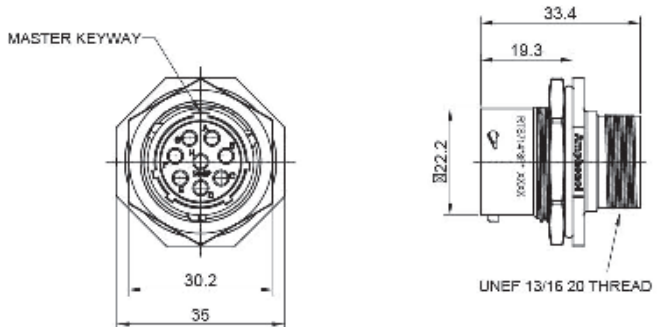

Male Figure 1 RTS714N8P03

Jam Nut Receptacle

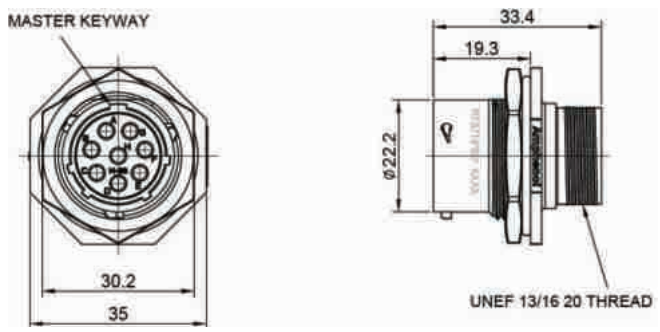

Female Figure 2 RTS714N8S03

Jam Nut Receptacle with Endcap

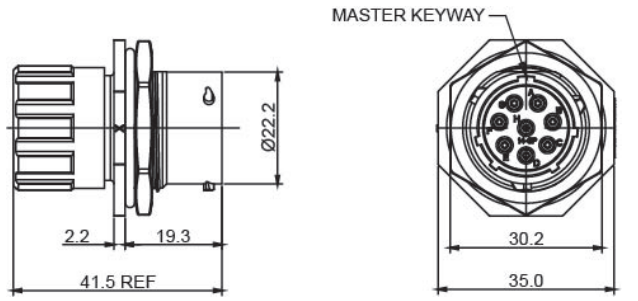

Male Figure 3 RTS714N8PHEC03

Shell Size: 14 **Number of Contacts: 8** **Contact Size: 16**

Sealing: IP67 / IP69k Salt Spray: 500h

Dimensions Square Flange Receptacles

Square Flange Receptacle

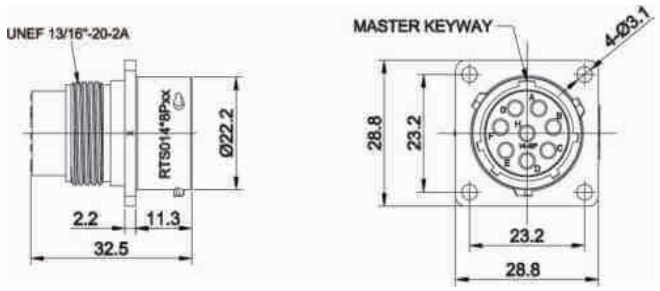

Male Figure 4 RTS014N8P03

Square Flange Receptacle

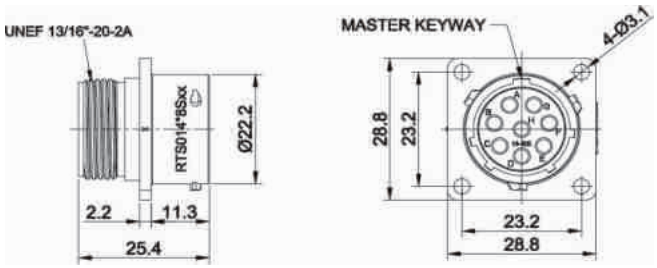

Female Figure 5 RTS014N8S03

Square Flange Receptacle with Endcap

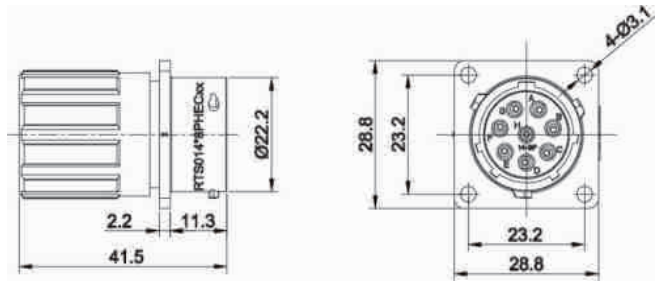

Male Figure 6 RTS014N8PHEC03

Square Flange Receptacle with Endcap

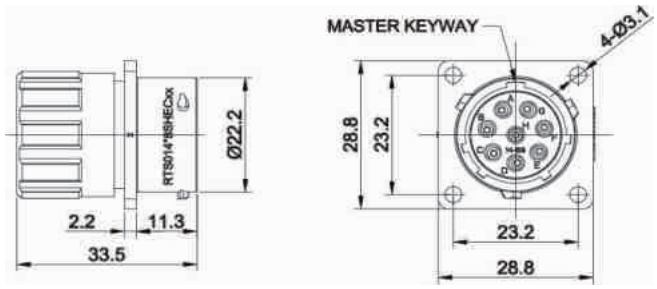

Female Figure 7 RTS014N8SHEC03

Shell Size: 14 **Number of Contacts: 8** **Contact Size: 16**

Sealing: IP67 / IP69k Salt Spray: 500h

Dimensions Plug

Plug

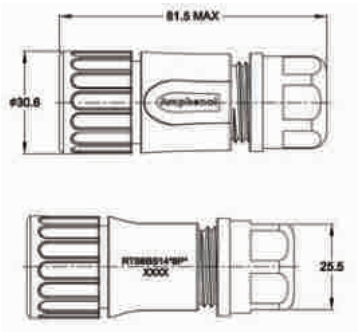

Male Figure 5 RTS6BS14N8P03

Plug

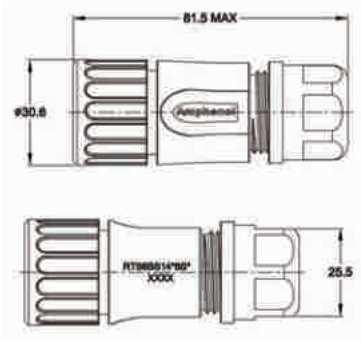

Female Figure 6 RTS6BS14N8S03

Plug with Endcap

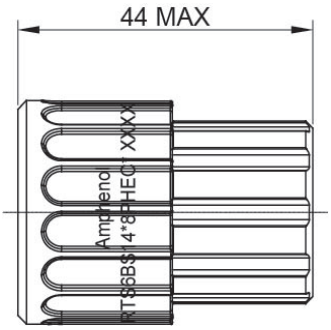

Male Figure 7 RTS6BS14N8PHEC03

Plug with Endcap

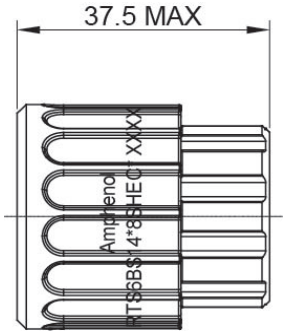

Female Figure 8 RTS6BS14N8SHEC03

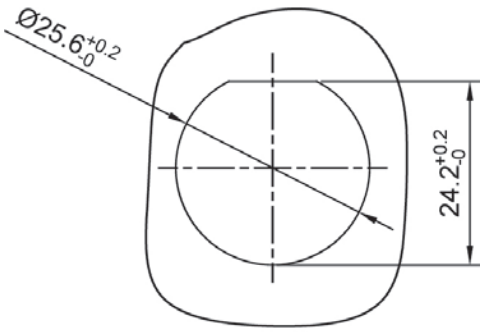

PANEL CUTOUT REFERENCE
THICKNESS:3.2MM (MAX)

Shell Size: 14 **Number of Contacts: 8** **Contact Size: 16**

Sealing: IP67 / IP69k Salt Spray: 500h

Accessories

Dust Cap for Receptacle, Size 14

RTS014DCG

Dust Cap for Plug, Size 14

RTS614NDCG

Sealing Plug, Size 16

A114017-SR

Coding Color Ring, Yellow, Size 14

RTS14CCRY

Coding Color Ring, Green, Size 14

RTS14CCRG

Coding Color Ring, Red, Size 14

RTS14CCRR

Shell Size: 14 **Number of Contacts: 8** **Contact Size: 16**

Sealing: IP67 / IP69k Salt Spray: 500h

Contacts

Machined Contacts

Crimp Contacts, Machined

Part Number		AWG	Wire Range (mm²)	Plating
Male	Female			
MP14M23F	MS14M23F	14	2.0-2.5	Gold Flash
MP14M23G5	MS14M23G5	14	2.0-2.5	Gold 5µ"
MP14M23G10	MS14M23G10	14	2.0-2.5	Gold 10µ"
MP14M23G15	MS14M23G15	14	2.0-2.5	Gold 15µ"
MP14M23G30	MS14M23G30	14	2.0-2.5	Gold 30µ"
MP16M23F	MS16M23F	18-16	.75-1.5	Gold Flash
MP16M23G5	MS16M23G5	18-16	.75-1.5	Gold 5µ"
MP16M23G10	MS16M23G10	18-16	.75-1.5	Gold 10µ"
MP16M23G15	MS16M23G15	18-16	.75-1.5	Gold 15µ"
MP16M23G30	MS16M23G30	18-16	.75-1.5	Gold 30µ"
MP20M23F	MS20M23F	22-20	.34-.50	Gold Flash
MP20M23G5	MS20M23G5	22-20	.34-.50	Gold 5µ"
MP20M23G10	MS20M23G10	22-20	.34-.50	Gold 10µ"
MP20M23G15	MS20M23G15	22-20	.34-.50	Gold 15µ"
MP20M23G30	MS20M23G30	22-20	.34-.50	Gold 30µ"
MP24M23F	MS24M23F	26-24	.14-.25	Gold Flash
MP24M23G5	MS24M23G5	26-24	.14-.25	Gold 5µ"
MP24M23G10	MS24M23G10	26-24	.14-.25	Gold 10µ"
MP24M23G15	MS24M23G15	26-24	.14-.25	Gold 15µ"
MP24M23G30	MS24M23G30	26-24	.14-.25	Gold 30µ"

Tools

Contact Extraction Tool, #16 (Ø 1.6) Contact

QXRT16

Hand Crimp Tool for Machined Contacts

MFX-3959

Pneumatic Crimp Tool for Machined Contacts

MFX-3960

Shell Size: 14 **Number of Contacts: 8** **Contact Size: 16**

Sealing: IP67 / IP69k Salt Spray: 500h

Contacts (con't)

Stamped & Formed Contacts

Crimp Contacts, Stamped & Formed

Part Number		AWG	Wire Range (mm²)	Plating
Male	Female			
SP14M2F	SS14M2F	14	2.0-2.5	Gold Flash
SP14M2G5	SS14M2G5	14	2.0-2.5	Gold 5µ"
SP14M2G10	SS14M2G10	14	2.0-2.5	Gold 10µ"
SP14M2G15	SS14M2G15	14	2.0-2.5	Gold 15µ"
SP14M2G30	SS14M2G30	14	2.0-2.5	Gold 30µ"
SP16M2F	SS16M2F	18-16	.75-1.5	Gold Flash
SP16M2G5	SS16M2G5	18-16	.75-1.5	Gold 5µ"
SP16M2G10	SS16M2G10	18-16	.75-1.5	Gold 10µ"
SP16M2G15	SS16M2G15	18-16	.75-1.5	Gold 15µ"
SP16M2G30	SS16M2G30	18-16	.75-1.5	Gold 30µ"
SP20M2F	SS20M2F	22-20	.34-.50	Gold Flash
SP20M2G5	SS20M2G5	22-20	.34-.50	Gold 5µ"
SP20M2G10	SS20M2G10	22-20	.34-.50	Gold 10µ"
SP20M2G15	SS20M2G15	22-20	.34-.50	Gold 15µ"
SP20M2G30	SS20M1G30	22-20	.34-.50	Gold 30µ"
SP24M2F	SS24M2F	26-24	.14-.25	Gold Flash
SP24M2G5	SS24M2G5	26-24	.14-.25	Gold 5µ"
SP24M2G10	SS24M2G10	26-24	.14-.25	Gold 10µ"
SP24M2G15	SS24M2G15	26-24	.14-.25	Gold 15µ"
SP24M2G30	SS24M2G30	26-24	.14-.25	Gold 30µ"

Tools

Contact Extraction Tool, #16 (Ø 1.6) Contact

QXRT16

Hand Tool, Stamped & Formed Contact, Size16, 20-14 AWG

MFX-3954

Crimp Die for Stamped & Formed Contact

MFX-3957

STEP 1
Choose Receptacle Style

STEP 2
Choose Plug Style

Jam Nut Receptacles

RTS718N8P03

RTS718N8S03

RTS718N8PHEC03

Square Flange Receptacles

RTS018N8P03

RTS018N8S03

RTS018N8PHEC03

RTS018N8SHEC03

Plugs

RTS6BS18N8P03

RTS6BS18N8S03

RTS6BS18N8PHEC03

RTS6BS18N8SHEC03

SEE TABLE ON NEXT PAGE FOR PART DETAILS

CONTACTS SOLD SEPARATELY SEE PAGE 133

Shell Size: 18 Number of Contacts: 8 Contact Size: 2.5mm
Sealing: IP67 / IP69k Salt Spray: 500h

eco|mate® Aquarius Standard Products

- Suitable For Indoor and Outdoor Applications
- EMI/RMI Shielding Capability with Appropriate Backshell
- Operating Temperature: -40°C to +125°C
- 500 Mating Cycles
- Contacts and Cord Grips Ordered Separately
- UL ECBT2 Certified*

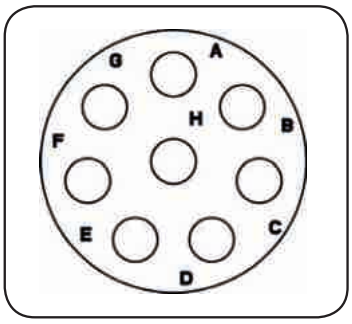

Insert Arrangement
Pin (Male) Faceview

Connector Part Numbers - Receptacles

PART NO#	Description	Temperature Range	Figure Drawing
RTS718N8P03	Receptacle, jam nut, 8 positions, size 18, pin contact, silicone rubber seal	-40 to 125°C	1
RTS718N8PHEC03	Receptacle, jam nut, 8 positions, size 18, pin contact, silicone rubber seal, encap	-40 to 125°C	3
RTS718N8S03	Receptacle, jam nut, 8 positions, size 18, socket contact, silicone rubber seal	-40 to 125°C	2
RTS018N8P03	Receptacle, square flange, 8 positions, size 18, pin contact, silicone rubber seal	-40 to 125°C	4
RTS018N8PHEC03	Receptacle, square flange, 8 positions, size 18, pin contact, silicone rubber seal, endcap	-40 to 125°C	6
RTS018N8S03	Receptacle, square flange, 8 positions, size 18, socket contact, silicone rubber seal	-40 to 125°C	5
RTS018N8SHEC03	Receptacle, square flange, 8 positions, size 18, socket contact, silicone rubber seal, endcap	-40 to 125°C	7

Connector Part Numbers - Plugs

PART NO#	Description	Temperature Range	Figure Drawing
RTS6BS18N4P03	Straight plug with cord grip, 8 positions, size 18, pin contact, silicone rubber seal	-40 to 125°C	8
RTS6BS18N4PHEC03	Straight plug with end cap, 8 positions, size 18, pin contact, silicone rubber seal, endcap	-40 to 125°C	9
RTS6BS18N4S03	Straight plug with cord grip, 8 positions, size 18, socket contact, silicone rubber seal	-40 to 125°C	10
RTS6BS18N4SHEC03	Straight plug with end cap, 8 positions, size 18, socket contact, silicone rubber seal, endcap	-40 to 125°C	11

Contacts supplied separately see page 133

Shell Size: 18 Number of Contacts: 8 Contact Size: 2.5mm
Sealing: IP67 / IP69k Salt Spray: 500h

Dimensions Jam Nut

Jam Nut Receptacle

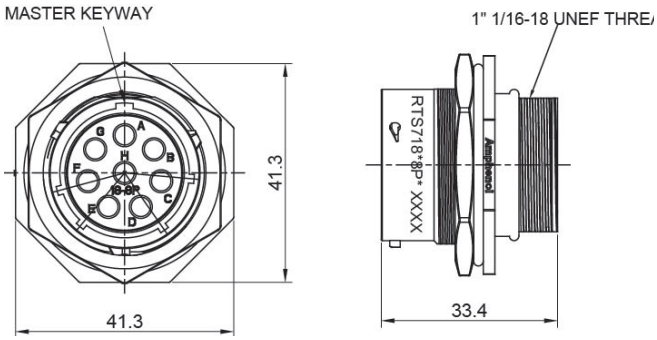

Male Figure 1 RTS718N8P03

Jam Nut Receptacle

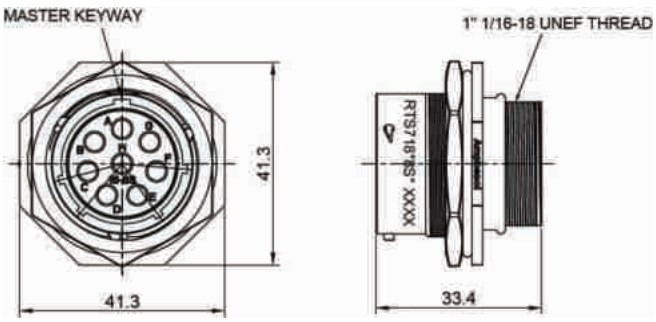

Female Figure 2 RTS718N8S03

Jam Nut Receptacle with Endcap

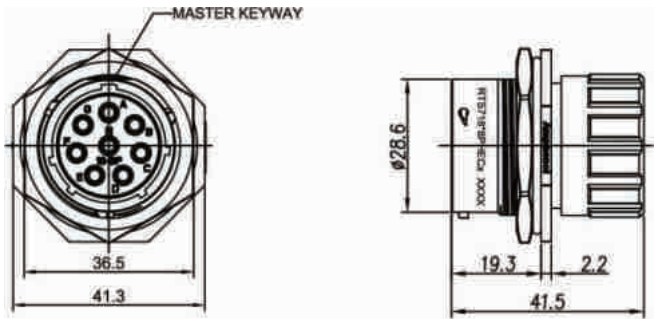

Male Figure 3 RTS718N8PHEC03

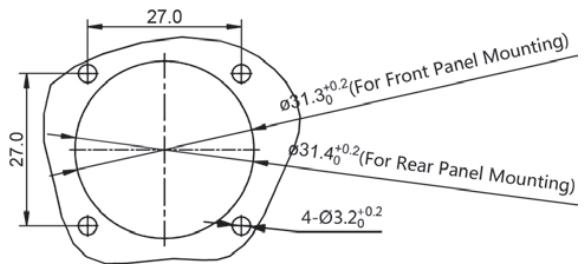

Shell Size: 18 **Number of Contacts: 8** **Contact Size: 2.5mm**
Sealing: IP67 / IP69k **Salt Spray: 500h**

Dimensions Square Flange Receptacles

Sqaure Flange Receptacle

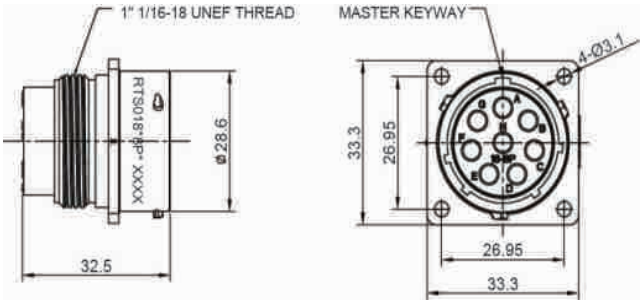

Male Figure 4 RTS018N8P03

Sqaure Flange Receptacle

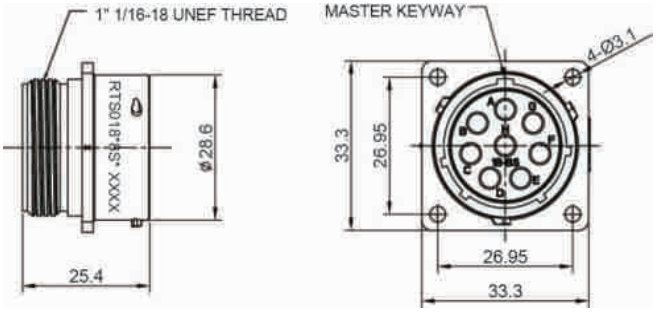

Female Figure 5 RTS018N8S03

Sqaure Flange Receptacle with Endcaps

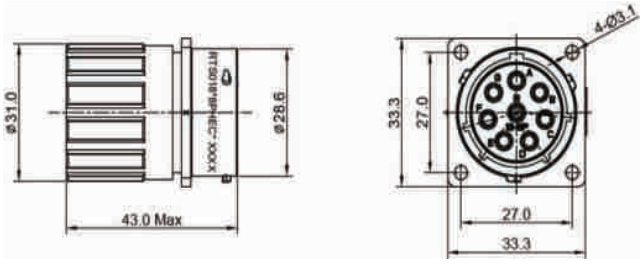

Male Figure 6 RTS018N8PHEC03

Sqaure Flange Receptacle with Endcap

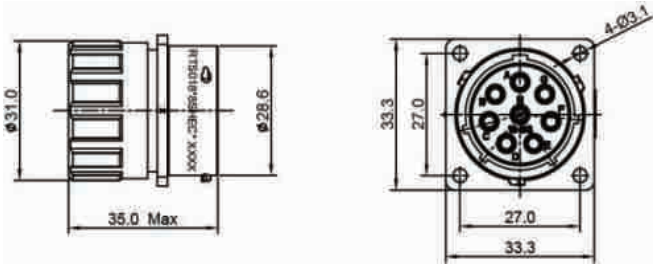

Female Figure 7 RTS018N8SHEC03

Shell Size: 18 **Number of Contacts: 8** **Contact Size: 2.5mm**
Sealing: IP67 / IP69k **Salt Spray: 500h**

Dimensions Plugs

Plug

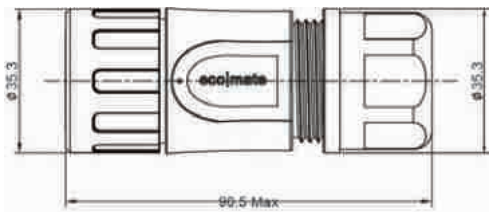

Male Figure 8 RTS6BS18N8P03

Plug

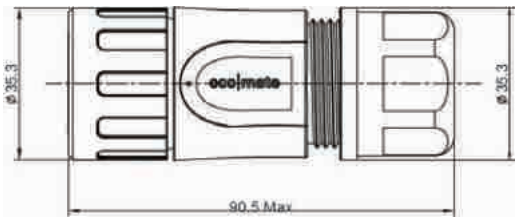

Female Figure 9 RTS6BS18N8S03

Plug with Endcap

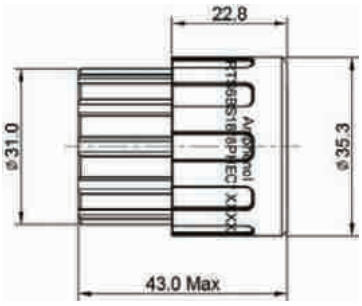

Male Figure 10 RTS6BS18N8PHEC03

Plug with Endcap

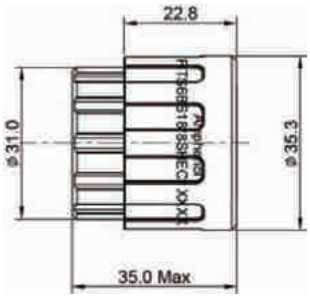

Female Figure 11 RTS6BS18N8SHEC03

Shell Size: 18 **Number of Contacts: 8** **Contact Size: 2.5mm**
Sealing: IP67 / IP69k **Salt Spray: 500h**

Accessories

Dust Cap for Plug, Size 18

RTS618NDCG

Dust Cap for Receptacle, Size 18

RTS018DCG

Sealing Plug, Size 2.5mm

A114017

Coding Color Ring, Yellow, Size 18

RTS18CCRY

Coding Color Ring, Green, Size 18

RTS18CCRG

Coding Color Ring, Red, Size 18

RTS18CCRR

Contacts

Stamped & Formed Contacts

Crimp Contacts, Stamped & Formed

Part Number		AWG	Wire Range (mm²)	Plating
Male	Female			
SP12A1T	SS12A1T	14-12	2.5-3.5	Tin

*No machined contacts are available for this group

Tools

Extraction Tool 2.5mm Contact

QXRT12S

Hand Tool, Stamped & Formed Contact, 2.5 mm

MFX-3962

STEP 1
Choose Receptacle Style

STEP 2
Choose Plug Style

SEE TABLE ON NEXT PAGE FOR PART DETAILS

CONTACTS SOLD SEPARATELY SEE PAGE 140

Jam Nut Receptacles

RTS716N09P03

RTS716N09S03

RTS716N09PHEC03

RTS716N09SHEC03

Square Flange Receptacles

RTS016N09P03

RTS016N09S03

RTS016N09PHEC03

RTS016N09SHEC03

Plug

RTS6BS16N09P03

RTS6BS16N09S03

RTS6BS16N09PHEC03

RTS6BS16N09SHEC03

Shell Size: 16 Number of Contacts: 9 (4+5) Contact Size: 4-16/5-2.5mm
Sealing: IP67 / IP69k Salt Spray: 500h

eco|mate® Aquarius Standard Products

- Suitable For Indoor and Outdoor Applications
- EMI/RMI Shielding Capability with Appropriate Backshell
- Operating Temperature: --40°C to +125°C
- 500 Mating Cycles
- Contacts and Cord Grips Ordered Separately
- UL ECBT2 Certified*

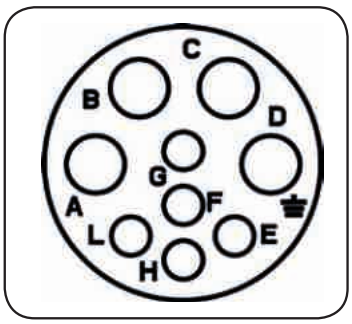

Insert Arrangement
Pin (Male) Faceview

Connector Part Numbers - Receptacles

PART NO#	Description	Temperature Range	Figure Drawing
RTS716N09P03	Receptacle, jam nut, 4+5 positions, size 16, pin contact, silicone rubber seal	-40 to 125°C	1
RTS716N09PHEC03	Receptacle, jam nut, 4+5 positions, size 16, pin contact, silicone rubber seal, endcap	-40 to 125°C	3
RTS716N09S03	Receptacle, jam nut, 4+5 positions, size 16, socket contact, silicone rubber seal	-40 to 125°C	2
RTS716N09SHEC03	Receptacle, jam nut, 4+5 positions, size 16, socket contact, silicone rubber seal, endcap	-40 to 125°C	4
RTS016N09P03	Receptacle, square flange, 4+5 positions, size 16, pin contact, silicone rubber seal	-40 to 125°C	5
RTS016N09PHEC03	Receptacle, square flange, 4+5 positions, size 16, pin contact, silicone rubber seal, endcap	-40 to 125°C	7
RTS016N09S03	Receptacle, square flange, 4+5 positions, size 16, socket contact, silicone rubber seal	-40 to 125°C	6
RTS016N09SHEC03	Receptacle, square flange, 4+5 positions, size 16, socket contact, silicone rubber seal, endcap	-40 to 125°C	8

Connector Part Numbers - Plugs

PART NO#	Description	Temperature Range	Figure Drawing
RTS6BS16N09P03	Straight plug with cord grip, 4+5 positions, size 16, pin contact, silicone rubber seal	-40 to 125°C	9
RTS6BS16N09PHEC03	Straight plug with end cap, 4+5 positions, size 16, pin contact, silicone rubber seal	-40 to 125°C	12
RTS6BS16N09S03	Straight plug with cord grip, 4+5 positions, size 16, socket contact, silicone rubber seal	-40 to 125°C	10
RTS6BS16N09SHEC03	Straight plug with end cap, 4+5 positions, size 16, socket contact, silicone rubber seal	-40 to 125°C	11

Contacts supplied separately see page 140

Shell Size: 16 Number of Contacts: 9 (4+5) Contact Size: 4-16/5-2.5mm
Sealing: IP67 / IP69k Salt Spray: 500h

Dimensions Jam Nut Receptacles

Jam Nut Receptacle

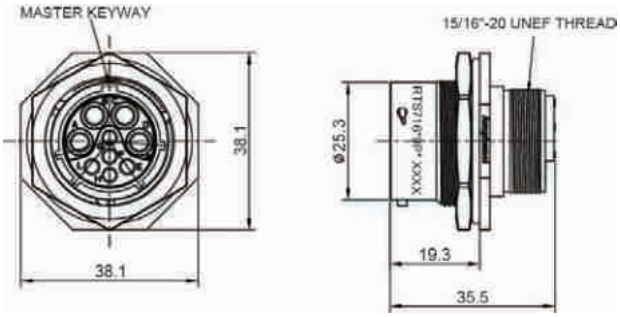

Male Figure 1 RTS716N09P03

Jam Nut Receptacle

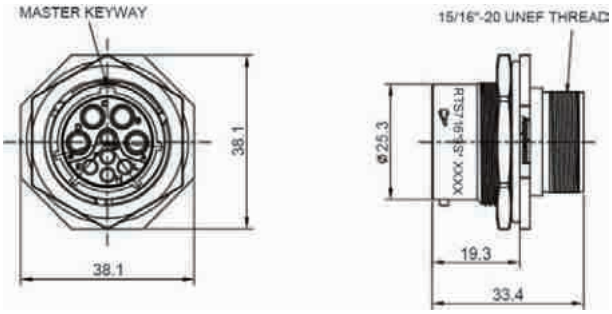

Female Figure 2 RTS716N09S03

Jam Nut Receptacle with Endcap

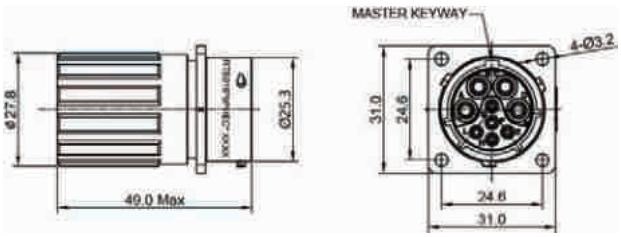

Male Figure 3 RTS716N09PHEC03

Jam Nut Receptacle with Endcap

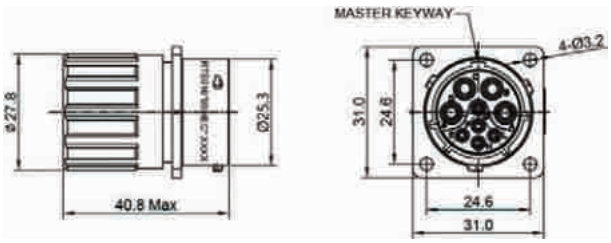

Female Figure 4 RTS716N09SHEC03

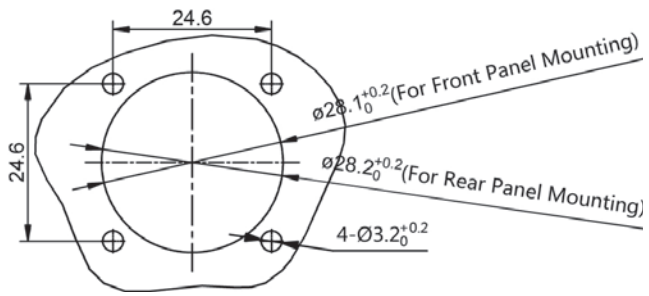

Shell Size: 16 Number of Contacts: 9 (4+5) Contact Size: 4-16/5-2.5mm
Sealing: IP67 / IP69k Salt Spray: 500h

Dimensions Square Flange Receptacles

Sqaure Flange Receptacle

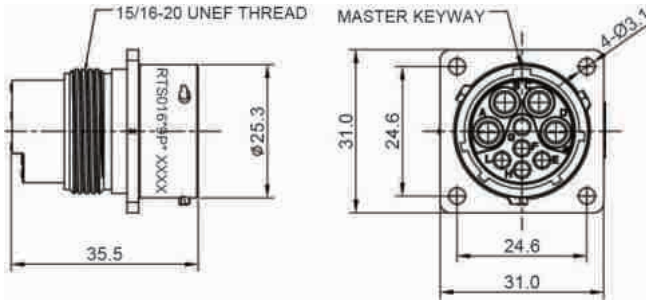

Male Figure 5 RTS016N09P03

Sqaure Flange Receptacle

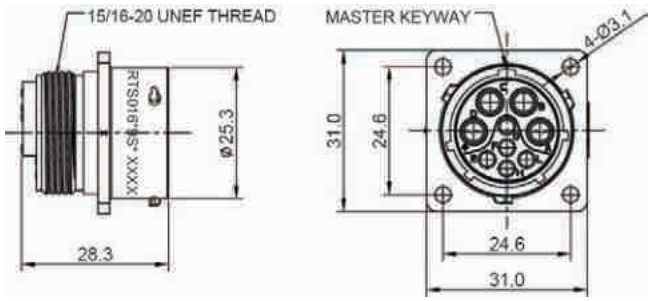

Female Figure 6 RTS016N09S03

Sqaure Flange Receptacle with Endcap

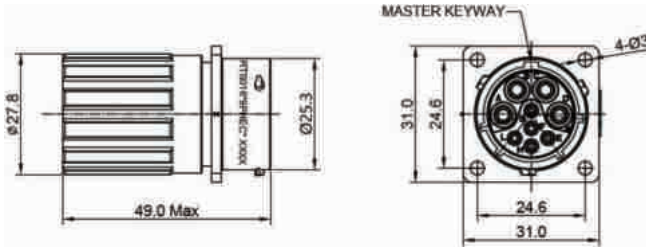

Male Figure 7 RTS016N09PHEC03

Sqaure Flange Receptacle with Endcap

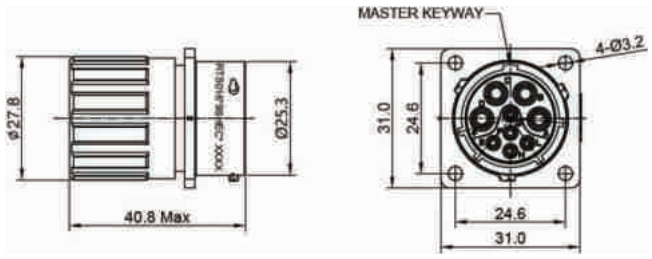

Female Figure 8 RTS016N09SHEC03

Shell Size: 16 Number of Contacts: 9 (4+5) Contact Size: 4-16/5-2.5mm
Sealing: IP67 / IP69k Salt Spray: 500h

Dimensions Plugs

Plug

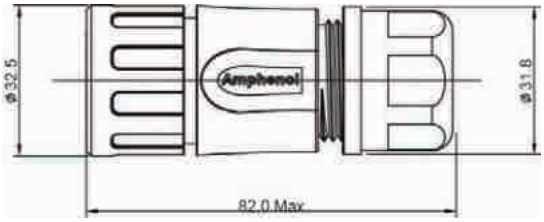

Male Figure 9 RTS6BS16N9P03

Plug

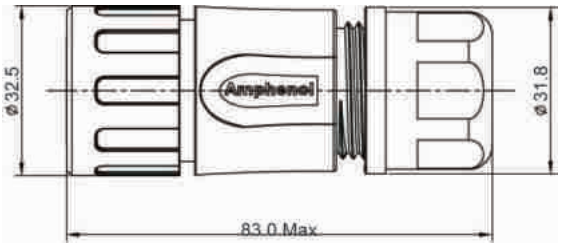

Female Figure 10 RTS6BS16N9S03

Plug with Endcap

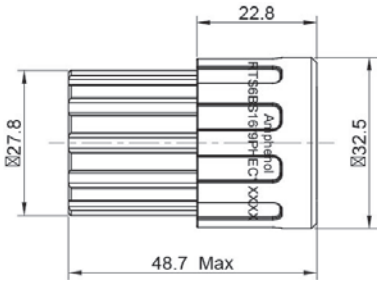

Male Figure 11 RTS6BS16N9PHEC03

Plug with Endcap

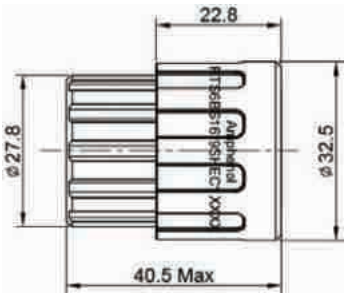

Female Figure 12 RTS6BS16N9SHEC03

Shell Size: 16 Number of Contacts: 9 (4+5) Contact Size: 4-16/5-2.5mm
Sealing: IP67 / IP69k Salt Spray: 500h

Accessories

Dust Cap for Receptacle, Size 16

RTS016DCG

Dust Cap for Plug, Size 16

RTS616NDCG

Sealing Plug, Size 16

A114017-SR

Coding Color Ring, Yellow, Size 16

RTS16CCRY

Coding Color Ring, Green, Size 16

RTS16CCRG

Coding Color Ring, Red, Size 16

RTS16CCRR

Shell Size: 16 **Number of Contacts: 9 (4+5)** **Contact Size: 4-16/5-2.5mm**
Sealing: IP67 / IP69k **Salt Spray: 500h**

Contacts Machined

Machined Contacts

Crimp Contacts, Machined

Part Number		Contact Size	AWG	Wire Range (mm²)	Plating
Male	Female				
MP14M23F	MS14M23F	16	14	2.0-2.5	Gold Flash
MP14M23G5	MS14M23G5	16	14	2.0-2.5	Gold 5µ"
MP14M23G10	MS14M23G10	16	14	2.0-2.5	Gold 10µ"
MP14M23G15	MS14M23G15	16	14	2.0-2.5	Gold 15µ"
MP14M23G30	MS14M23G30	16	14	2.0-2.5	Gold 30µ"
MP16M23F	MS16M23F	16	18-16	.75-1.5	Gold Flash
MP16M23G5	MS16M23G5	16	18-16	.75-1.5	Gold 5µ"
MP16M23G10	MS16M23G10	16	18-16	.75-1.5	Gold 10µ"
MP16M23G15	MS16M23G15	16	18-16	.75-1.5	Gold 15µ"
MP16M23G30	MS16M23G30	16	18-16	.75-1.5	Gold 30µ"
MP20M23F	MS20M23F	16	22-20	.34-.50	Gold Flash
MP20M23G5	MS20M23G5	16	22-20	.34-.50	Gold 5µ"
MP20M23G10	MS20M23G10	16	22-20	.34-.50	Gold 10µ"
MP20M23G15	MS20M23G15	16	22-20	.34-.50	Gold 15µ"
MP20M23G30	MS20M23G30	16	22-20	.34-.50	Gold 30µ"
MP24M23F	MS24M23F	16	26-24	.14-.25	Gold Flash
MP24M23G5	MS24M23G5	16	26-24	.14-.25	Gold 5µ"
MP24M23G10	MS24M23G10	16	26-24	.14-.25	Gold 10µ"
MP24M23G15	MS24M23G15	16	26-24	.14-.25	Gold 15µ"
MP24M23G30	MS24M23G30	16	26-24	.14-.25	Gold 30µ"

Tools

Extraction Tool 2.5mm Contact

QXRT12S

Hand Crimp Tool for Machined Contacts

MFX-3959

Pneumatic Crimp Tool for Machined Contacts

MFX-3960

Shell Size: 16 **Number of Contacts: 9 (4+5)** **Contact Size: 4-16/5-2.5mm**
Sealing: IP67 / IP69k **Salt Spray: 500h**

Contacts Stamped &Formed

Stamped & Formed Contacts

2.5mm

Crimp Contacts, Stamped & Formed

Part Number		Contact Size	AWG	Wire Range (mm²)	Plating
Male	Female				
SP12A1T	SS12A1T	2.5mm	14-12	2.5-3.5	Tin
SP14M2F	SS14M2F	16	14	2.0-2.5	Gold Flash
SP14M2G5	SS14M2G5	16	14	2.0-2.5	Gold 5µ"
SP14M2G10	SS14M2G10	16	14	2.0-2.5	Gold 10µ"
SP14M2G15	SS14M2G15	16	14	2.0-2.5	Gold 15µ"
SP14M2G30	SS14M2G30	16	14	2.0-2.5	Gold 30µ"
SP16M2F	SS16M2F	16	18-16	.75-1.5	Gold Flash
SP16M2G5	SS16M2G5	16	18-16	.75-1.5	Gold 5µ"
SP16M2G10	SS16M2G10	16	18-16	.75-1.5	Gold 10µ"
SP16M2G15	SS16M2G15	16	18-16	.75-1.5	Gold 15µ"
SP16M2G30	SS16M2G30	16	18-16	.75-1.5	Gold 30µ"
SP20M2F	SS20M2F	16	22-20	.34-.50	Gold Flash
SP20M2G5	SS20M2G5	16	22-20	.34-.50	Gold 5µ"
SP20M2G10	SS20M2G10	16	22-20	.34-.50	Gold 10µ"
SP20M2G15	SS20M2G15	16	22-20	.34-.50	Gold 15µ"
SP20M2G30	SS20M1G30	16	22-20	.34-.50	Gold 30µ"
SP24M2F	SS24M2F	16	26-24	.14-.25	Gold Flash
SP24M2G5	SS24M2G5	16	26-24	.14-.25	Gold 5µ"
SP24M2G10	SS24M2G10	16	26-24	.14-.25	Gold 10µ"
SP24M2G15	SS24M2G15	16	26-24	.14-.25	Gold 15µ"
SP24M2G30	SS24M2G30	16	26-24	.14-.25	Gold 30µ"

Tools

Extraction Tool 2.5mm Contact

QXRT12S

Contact Extraction Tool, #16 (Ø 1.6) Contact

QXRT16

Hand Tool, Stamped & Formed Contact, 2.5 mm

MFX-3962

Hand Tool, Stamped & Formed Contact, Size 16, 20-14 AWG

MFX-3954

Crimp Die for Stamped & Formed Contact

MFX-3957

STEP 1 Choose Receptacle Style	STEP 2 Choose Plug Style

SEE TABLE ON NEXT PAGE FOR PART DETAILS

Jam Nut Receptacles

RTS712N10P03

RTS712N10S03

RTS712N10PHEC03

Square FInge Receptacles

RTS012N10P03

RTS012N10S03

RTS012N10PHEC03

RTS012N10SHEC03

Plug

RTS6BS12N10P03

RTS6BS12N10S03

RTS6BS12N10PHEC03

RTS6BS12N10SHEC03

CONTACTS SOLD SEPARATELY SEE PAGE 148

Shell Size: 12 Number of Contacts: 10 Contact Size: 20
Sealing: IP67 / IP69k Salt Spray: 500h

eco|mate® Aquarius Standard Products

- Suitable For Indoor and Outdoor Applications
- EMI/RMI Shielding Capability with Appropriate Backshell
- Operating Temperature: -40°C to +125°C
- 500 Mating Cycles
- Contacts and Cord Grips Ordered Separately
- UL ECBT2 Certified*

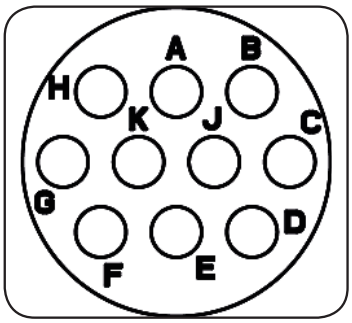

Insert Arrangement
Pin (Male) Faceview

Connector Part Numbers -Receptacles

PART NO#	Description	Temperature Range	Figure Drawing
RTS712N10P03	Receptacle, jam nut, 10 positions, size 12, pin contact, silicone rubber seal	-40 to 125°C	1
RTS712N10PHEC03	Receptacle, jam nut, 10 positions, size 12, pin contact, silicone rubber seal, endcap	-40 to 125°C	3
RTS712N10S03	Receptacle, jam nut, 10 positions, size 12, socket contact, silicone rubber seal	-40 to 125°C	2
RTS012N10P03	Receptacle, square flange, 10 positions, size 12, pin contact, silicone rubber seal	-40 to 125°C	4
RTS012N10PHEC03	Receptacle, square flange, 10 positions, size 12, pin contact, silicone rubber seal, endcap	-40 to 125°C	6
RTS012N10S03	Receptacle, square flange, 10 positions, size 12, socket contact, silicone rubber seal	-40 to 125°C	5
RTS012N10SHEC03	Receptacle, square flange, 10 positions, size 12, socket contact, silicone rubber seal, endcap	-40 to 125°C	7

Connector Part Numbers -Plugs

PART NO#	Description	Temperature Range	Figure Drawing
RTS6BS12N10P03	Straight plug with cord grip, 10 positions, size 12, pin contact, silicone rubber seal	-40 to 125°C	8
RTS6BS12N10PHEC03	Straight plug with end cap, 10 positions, size 12, pin contact, silicone rubber seal	-40 to 125°C	10
RTS6BS12N10S03	Straight plug with cord grip, 10 positions, size 12, socket contact, silicone rubber seal	-40 to 125°C	9
RTS6BS12N10SHEC03	Straight plug with end cap, 10 positions, size 12, socket contact, silicone rubber seal	-40 to 125°C	11

Contacts supplied separately see page 148

Shell Size: 12 Number of Contacts: 10 Contact Size: 20
Sealing: IP67 / IP69k Salt Spray: 500h

Dimensions Jam Nut

Jam Nut Receptacle

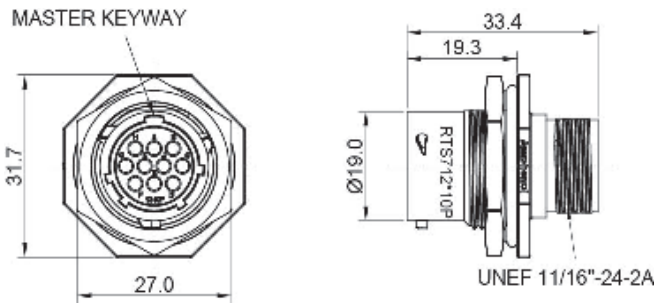

Male Figure 1 RTS712N10P03

Jam Nut Receptacle

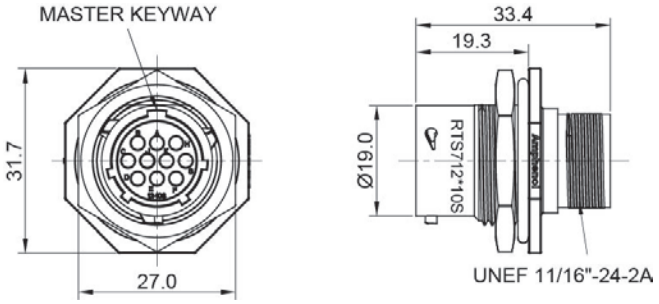

Female Figure 2 RTS712N10S03

Jam Nut Receptacle w Endcap

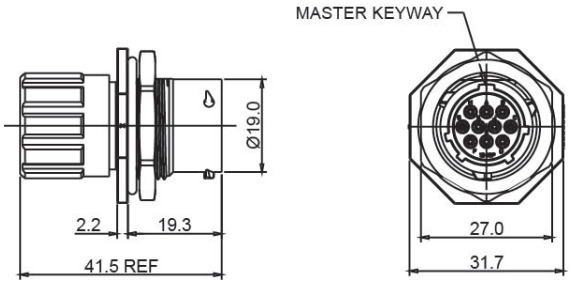

Male Figure 3 RTS712N10PHEC03

Shell Size: 12 **Number of Contacts: 10** **Contact Size: 20**
Sealing: IP67 / IP69k **Salt Spray: 500h**

SquareFlange Receptacles

Square Flange Receptacle

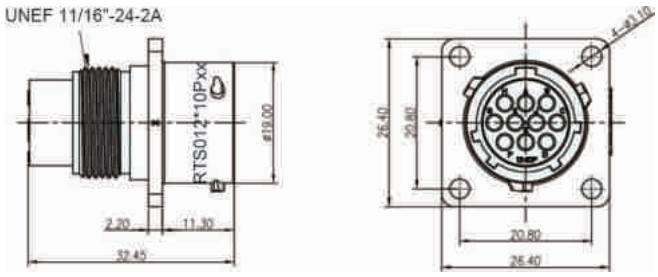

Male Figure 4 RTS012N10P03

Square Flange Receptacle

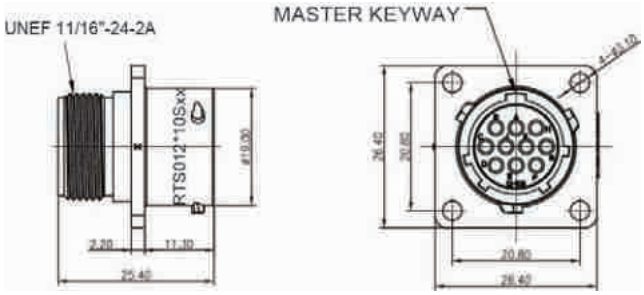

Female Figure 5 RTS012N10S03

Square Flange Receptacle with Endcap

Male Figure 6 RTS012N10PHEC03

Square Flange Receptacle with Endcap

Female Figure 7 RTS012N10SHEC03

Shell Size: 12 Number of Contacts: 10 Contact Size: 20
Sealing: IP67 / IP69k Salt Spray: 500h

Dimensions Plugs

Plug

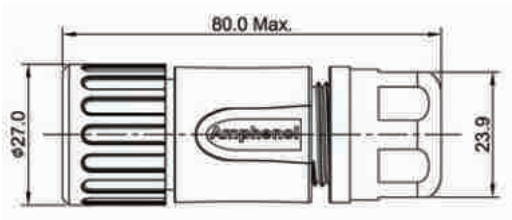

Male Figure 8 RTS6BS12N10P03

Plug

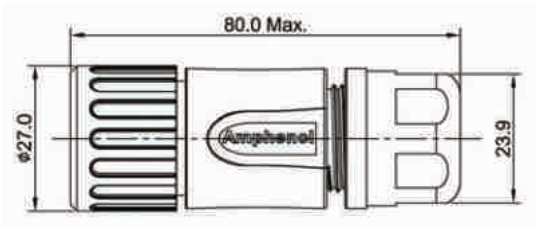

Female Figure 9 RTS6BS12N10S03

Plug with Endcap

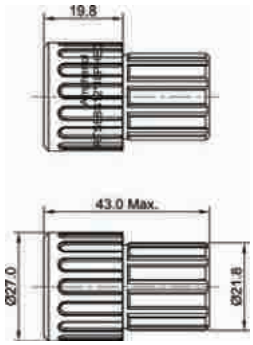

Male Figure 10 RTS6BS12N10PHEC03

Plug with Endcap

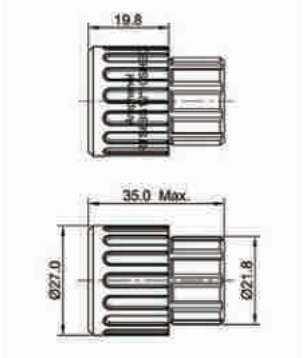

Female Figure 11 RTS6BS12N10SHEC03

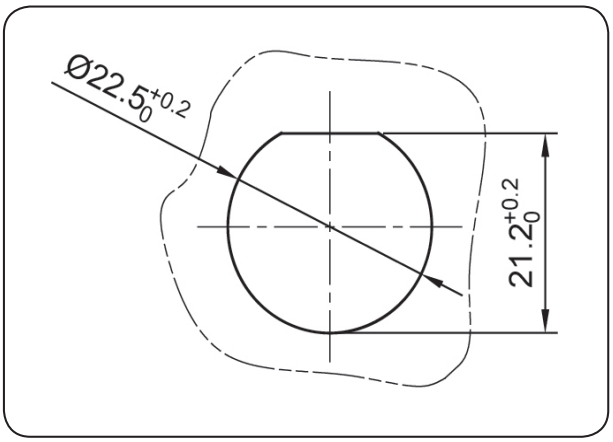

Shell Size: 12 Number of Contacts: 10 Contact Size: 20
Sealing: IP67 / IP69k Salt Spray: 500h

Accessories

Dust Cap for Receptacle, Size 12

RTS012DCG

Dust Cap for Plug, Size 12

RTS612NDCG

Sealing Plug, Size 20

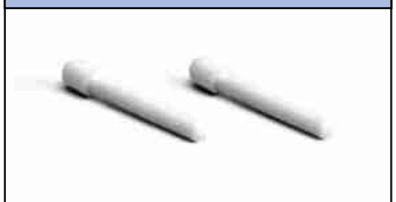

AT13-204-2005

Coding Color Ring, Yellow, Size 12

RTS12CCRY

Coding Color Ring, Green, Size 12

RTS12CCRG

Coding Color Ring, Red, Size 12

RTS12CCRR

Shell Size: 12 **Number of Contacts: 10** **Contact Size: 20**
Sealing: IP67 / IP69k **Salt Spray: 500h**

Contacts Machined

Machined Contacts

Crimp Contacts, Machined

Part Number		AWG	Wire Ranget (mm²)	Plating
Male	Female			
MP20W23F	MS20W23F	22-20	.34-.50	Gold Flash
MP20W23G5	MS20W23G5	22-20	.34-.50	Gold 5µ"
MP20W23G10	MS20W23G10	22-20	.34-.50	Gold 10µ"
MP20W23G15	MS20W23G15	22-20	.34-.50	Gold 15µ"
MP20W23G30	MS20W23G30	22-20	.34-.50	Gold 30µ"
MP24W23F	MS24W23F	26-24	.13-.25	Gold Flash
MP24W23G5	MS24W23G5	26-24	.13-.25	Gold 5µ"
MP24W23G10	MS24W23G10	26-24	.13-.25	Gold 10µ"
MP24W23G15	MS24W23G15	26-24	.13-.25	Gold 15µ"
MP24W23G30	MS24W23G30	26-24	.13-.25	Gold 30µ"
MP28W23F	MS28W23F	30-28	.05-.08	Gold Flash
MP28W23G5	MS28W23G5	30-28	.05-.08	Gold 5µ"
MP28W23G10	MS28W23G10	30-28	.05-.08	Gold 10µ"
MP28W23G15	MS28W23G15	30-28	.05-.08	Gold 15µ"
MP28W23G30	MS28W23G30	30-28	.05-.08	Gold 30µ"

Tools

Contact Extraction Tool, #20 (Ø 1.6) Contact

QXRT20

Hand Crimp Tool for Machined Contacts

MFX-3959

Pneumatic Crimp Tool for Machined Contact

MFX-3960

Shell Size: 12 **Number of Contacts: 10** **Contact Size: 20**

Sealing: IP67 / IP69k Salt Spray: 500h

Contacts Stamped & Formed

Stamped & Formed Contacts

Crimp Contacts, Stamped & Formed

Part Number		AWG	Wire Range (mm²)	Plating
Male	Female			
SP20W2F	SS20W2F	22-20	.34-.50	Gold Flash
SP20W2G5	SS20W2G5	22-20	.34-.50	Gold 5µ"
SP20W2G10	SS20W2G10	22-20	.34-.50	Gold 10µ"
SP20W2G15	SS20W2G15	22-20	.34-.50	Gold 15µ"
SP20W2G30	SS20W2G30	22-20	.34-.50	Gold 30µ"
SP24W2F	SS24W2F	26-24	.14-.25	Gold Flash
SP24W2G5	SS24W2G5	26-24	.14-.25	Gold 5µ"
SP24W2G10	SS24W2G10	26-24	.14-.25	Gold 10µ"
SP24W2G15	SS24W2G15	26-24	.14-.25	Gold 15µ"
SP24W2G30	SS24W2G30	26-24	.14-.25	Gold 30µ"
SP28W2F	SS28W2F	30-28	.05-.08	Gold Flash
SP28W2G5	SS28W2G5	30-28	.05-.08	Gold 5µ"
SP28W2G10	SS28W2G10	30-28	.05-.08	Gold 10µ"
SP28W2G15	SS28W2G15	30-28	.05-.08	Gold 15µ"
SP28W2G30	SS28W2G30	30-28	.05-.08	Gold 30µ"

Tools

Contact Extraction Tool, #20 (Ø 1.6) Contact

QXRT20

Hand Tool, Stamped & Formed Contact, Size 20 20-28AWG

MFX-3958

Crimp Die for Stamped & Formed Contact

MFX-3957

STEP 1
Choose Receptacle Style

STEP 2
Choose Plug Style

SEE TABLE ON NEXT PAGE FOR PART DETAILS

CONTACTS SOLD SEPARATELY SEE PAGE 156

Jam Nut Receptacles

RTS714N12P03

RTS714N12S03

RTS714N12PHEC03

Square Flange Receptacles

RTS014N12P03

RTS014N12S03

RTS014N12PHEC03

RTS014N12SHEC03

Plug

RTS6BS14N12P03

RTS6BS14N12S03

RTS6BS14N12PHEC03

RTS6BS14N12SHEC03

Shell Size: 14 Number of Contacts: 12 Contact Size: 16
Sealing: IP67 / IP69k Salt Spray: 500h

eco|mate® Aquarius Standard Products

- Suitable For Indoor and Outdoor Applications
- EMI/RMI Shielding Capability with Appropriate Backshell
- Operating Temperature: -40°C to +125°C
- 500 Mating Cycles
- Contacts and Cord Grips Ordered Separately
- UL ECBT2 Certified*

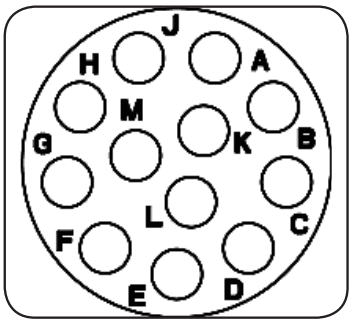

Insert Arrangement
Pin (Male) Faceview

Connector Part Numbers -Receptacles

PART NO#	Description	Temperature Range	Figure Drawing
RTS714N12P03	Receptacle, jam nut, 12 positions, size 14, pin contact, silicone rubber seal	-40 to 125°C	1
RTS714N12PHEC03	Receptacle, jam nut, 12 positions, size 14, pin contact, silicone rubber seal, endcap	-40 to 125°C	3
RTS714N12S03	Receptacle, jam nut, 12 positions, size 14, socket contact, silicone rubber seal	-40 to 125°C	2
RTS014N12P03	Receptacle, square flange, 12 positions, size 14, pin contact, silicone rubber seal	-40 to 125°C	4
RTS014N12PHEC03	Receptacle, square flange, 12 positions, size 14, pin contact, silicone rubber seal, encap	-40 to 125°C	7
RTS014N12S03	Receptacle, square flange, 12 positions, size 14, socket contact, silicone rubber seal	-40 to 125°C	5
RTS014N12SHEC03	Receptacle, square flange, 12 positions, size 14, socket contact, silicone rubber seal, encap	-40 to 125°C	6

Connector Part Numbers -Plugs

PART NO#	Description	Temperature Range	Figure Drawing
RTS6BS14N12P03	Straight plug with cord grip, 12 positions, size 14, pin contact, silicone rubber seal	-40 to 125°C	8
RTS6BS14N12PHEC03	Straight plug with end cap, 12 positions, size 14, pin contact, endcap, silicone rubber seal	-40 to 125°C	10
RTS6BS14N12S03	Straight plug with cord grip, 12 positions, size 14, socket contact, silicone rubber seal	-40 to 125°C	9
RTS6BS14N12SHEC03	Straight plug with end cap, 12 positions, size 14, socket contact, endcap, silicone rubber seal	-40 to 125°C	11

Contacts supplied separately see page 156

Shell Size: 14 Number of Contacts: 12 Contact Size: 16
Sealing: IP67 / IP69k Salt Spray: 500h

Dimensions Jam Nut Receptacle

Jam Nut Receptacle

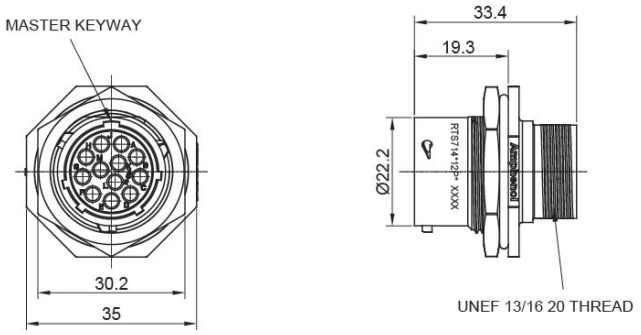

Male Figure 1 RTS714N12P03

Jam Nut Receptacle

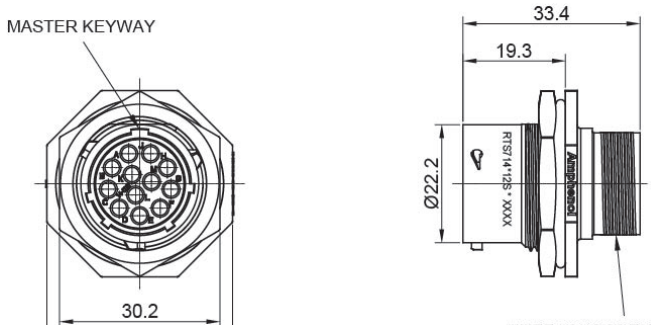

Female Figure 2 RTS714N12S03

Jam Nut Receptacle with Endcap

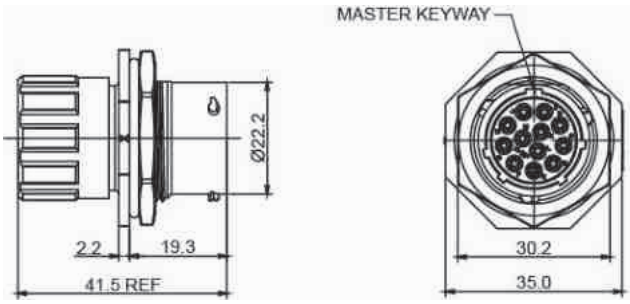

Male Figure 3 RTS714N12PHEC03

Shell Size: 14 Number of Contacts: 12 Contact Size: 16
Sealing: IP67 / IP69k Salt Spray: 500h

Dimensions Square Flange Receptacles

Square Flange Receptacle

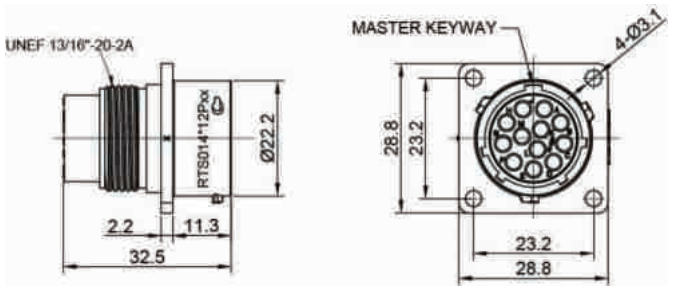

Male Figure 4 RTS014N12P03

Square Flange Receptacle

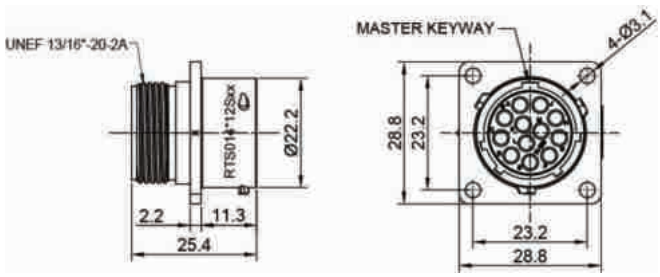

Female Figure 5 RTS014N12S03

Square Flange Receptacle with Endcap

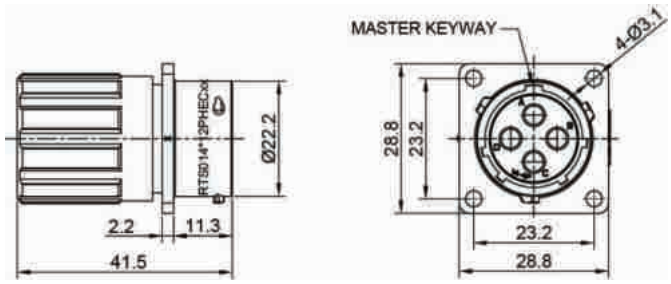

Male Figure 6 RTS014N12PHEC03

Square Flange Receptacle with Endcap

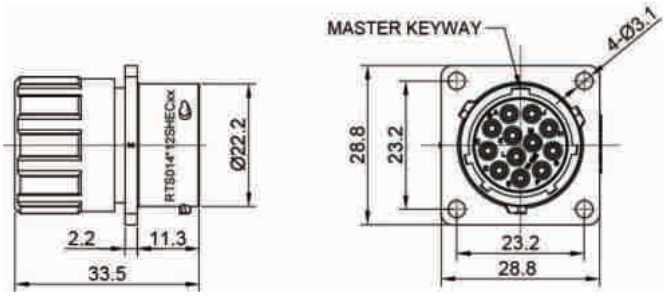

Female Figure 7 RTS014N12SHEC03

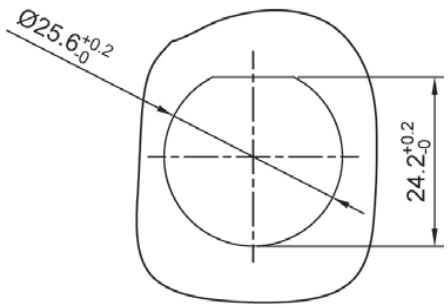

PANEL CUTOUT REFERENCE
THICKNESS:3.2MM (MAX)

Shell Size: 14 **Number of Contacts: 12** **Contact Size: 16**
Sealing: IP67 / IP69k **Salt Spray: 500h**

Dimensions Plugs

Plug

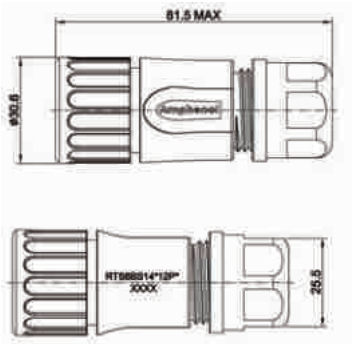

Male Figure 8 RTS6BS14N12P03

Plug

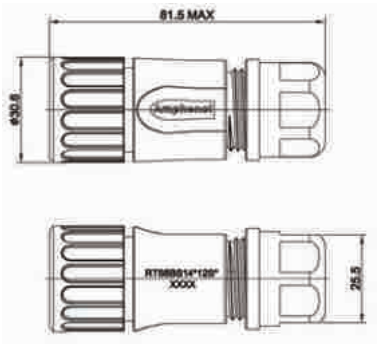

Female Figure 9 RTS6BS14N12S03

Plug with Endcap

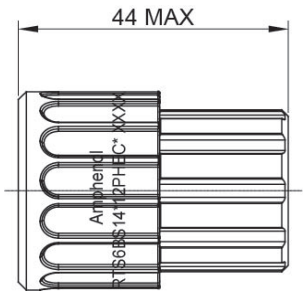

Male Figure 10 RTS6BS14N12PHEC03

Plug with Endcap

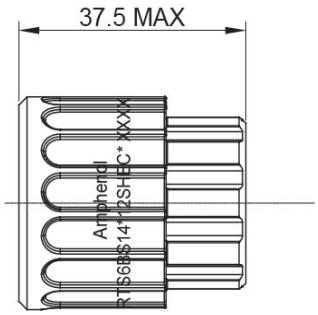

Female Figure 11 RTS6BS14N12SHEC03

Shell Size: 14 Number of Contacts: 12 Contact Size: 16
Sealing: IP67 / IP69k Salt Spray: 500h

Accessories

Dust Cap for Receptacle, Size 14

RTS014DCG

Dust Cap for Plug, Size 14

RTS614NDCG

Sealing Plug, Size 16

A114017-SR

Coding Color Ring, Yellow, Size 14

RTS14CCRY

Coding Color Ring, Green, Size 14

RTS14CCRG

Coding Color Ring, Red, Size 14

RTS14CCRR

Shell Size: 14 **Number of Contacts: 12** **Contact Size: 16**
Sealing: IP67 / IP69k **Salt Spray: 500h**

Contacts

Machined Contacts

Crimp Contacts, Machined

Part Number		AWG	Wire Range (mm²)	Plating
Male	Female			
MP14M23F	MS14M23F	14	2.0-2.5	Gold Flash
MP14M23G5	MS14M23G5	14	2.0-2.5	Gold 5µ"
MP14M23G10	MS14M23G10	14	2.0-2.5	Gold 10µ"
MP14M23G15	MS14M23G15	14	2.0-2.5	Gold 15µ"
MP14M23G30	MS14M23G30	14	2.0-2.5	Gold 30µ"
MP16M23F	MS16M23F	18-16	.75-1.5	Gold Flash
MP16M23G5	MS16M23G5	18-16	.75-1.5	Gold 5µ"
MP16M23G10	MS16M23G10	18-16	.75-1.5	Gold 10µ"
MP16M23G15	MS16M23G15	18-16	.75-1.5	Gold 15µ"
MP16M23G30	MS16M23G30	18-16	.75-1.5	Gold 30µ"
MP20M23F	MS20M23F	22-20	.34-.50	Gold Flash
MP20M23G5	MS20M23G5	22-20	.34-.50	Gold 5µ"
MP20M23G10	MS20M23G10	22-20	.34-.50	Gold 10µ"
MP20M23G15	MS20M23G15	22-20	.34-.50	Gold 15µ"
MP20M23G30	MS20M23G30	22-20	.34-.50	Gold 30µ"
MP24M23F	MS24M23F	26-24	.14-.25	Gold Flash
MP24M23G5	MS24M23G5	26-24	.14-.25	Gold 5µ"
MP24M23G10	MS24M23G10	26-24	.14-.25	Gold 10µ"
MP24M23G15	MS24M23G15	26-24	.14-.25	Gold 15µ"
MP24M23G30	MS24M23G30	26-24	.14-.25	Gold 30µ"

Tools

Contact Extraction Tool, #16 (Ø 1.6) Contact

QXRT16

Hand Crimp Tool for Machined Contacts

MFX-3959

Pneumatic Crimp Tool for Machined Contacts

MFX-3960

Shell Size: 14 **Number of Contacts: 12** **Contact Size: 16**

Sealing: IP67 / IP69k Salt Spray: 500h

Contacts (con't)

Stamped & Formed Contacts

Crimp Contacts, Stamped & Formed

Part Number		AWG	Wire Range (mm²)	Plating
Male	Female			
SP14M2F	SS14M2F	14	2.0-2.5	Gold Flash
SP14M2G5	SS14M2G5	14	2.0-2.5	Gold 5µ"
SP14M2G10	SS14M2G10	14	2.0-2.5	Gold 10µ"
SP14M2G15	SS14M2G15	14	2.0-2.5	Gold 15µ"
SP14M2G30	SS14M2G30	14	2.0-2.5	Gold 30µ"
SP16M2F	SS16M2F	18-16	.75-1.5	Gold Flash
SP16M2G5	SS16M2G5	18-16	.75-1.5	Gold 5µ"
SP16M2G10	SS16M2G10	18-16	.75-1.5	Gold 10µ"
SP16M2G15	SS16M2G15	18-16	.75-1.5	Gold 15µ"
SP16M2G30	SS16M2G30	18-16	.75-1.5	Gold 30µ"
SP20M2F	SS20M2F	22-20	.34-.50	Gold Flash
SP20M2G5	SS20M2G5	22-20	.34-.50	Gold 5µ"
SP20M2G10	SS20M2G10	22-20	.34-.50	Gold 10µ"
SP20M2G15	SS20M2G15	22-20	.34-.50	Gold 15µ"
SP20M2G30	SS20M1G30	22-20	.34-.50	Gold 30µ"
SP24M2F	SS24M2F	26-24	.14-.25	Gold Flash
SP24M2G5	SS24M2G5	26-24	.14-.25	Gold 5µ"
SP24M2G10	SS24M2G10	26-24	.14-.25	Gold 10µ"
SP24M2G15	SS24M2G15	26-24	.14-.25	Gold 15µ"
SP24M2G30	SS24M2G30	26-24	.14-.25	Gold 30µ"

Tools

Contact Extraction Tool, #16 (Ø 1.6) Contact

QXRT16

Hand Tool, Stamped & Formed Contact, Size16, 20-14 AWG

MFX-3954

Crimp Die for Stamped & Formed Contact

MFX-3957

STEP 1
Choose Receptacle Style

STEP 2
Choose Plug Style

SEE TABLE ON NEXT PAGE FOR PART DETAILS

CONTACTS SOLD SEPARATELY SEE PAGE 164

Jam Nut Receptacles

RTS714N19P03

RTS714N19S03

RTS714N19PHEC03

Square Flange Receptacles

RTS014N19P03

RTS014N19S03

RTS014N19PHEC03

RTS014N19SHEC03

Plug

RTS6BS14N19P03

RTS6BS14N19S03

RTS6BS14N19PHEC03

RTS6BS14N19SHEC03

Shell Size: 14 Number of Contacts: 19 Contact Size: 20
Sealing: IP67 / IP69k Salt Spray: 500h

eco|mate® Aquarius Standard Products

- Suitable For Indoor and Outdoor Applications
- EMI/RMI Shielding Capability with Appropriate Backshell
- Operating Temperature: -40°C to +125°C
- 500 Mating Cycles
- Contacts and Cord Grips Ordered Separately
- UL ECBT2 Certified*

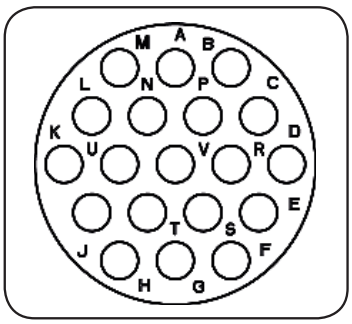

Insert Arrangement
Pin (Male) Faceview

Connector Part Numbers - Receptacles

PART NO#	Description	Temperature Range	Figure Drawing
RTS714N19P03	Receptacle, jam nut, 19 positions, size 14, pin contact, silicone rubber seal	-40 to 125°C	1
RTS714N19PHEC03	Receptacle, jam nut, 19 positions, size 14, pin contact, silicone rubber seal, endcap	-40 to 125°C	3
RTS714N19S03	Receptacle, jam nut, 19 positions, size 14, for socket contact, silicone rubber seal	-40 to 125°C	2
RTS014N19P03	Receptacle, square flange, 19 positions, size 14, pin contact, silicone rubber seal	-40 to 125°C	4
RTS014N19PHEC03	Receptacle, square flange, 19 positions, size 14, pin contact, silicone rubber seal, endcap	-40 to 125°C	6
RTS014N19S03	Receptacle, square flange, 19 positions, size 14, for socket contact, silicone rubber seal	-40 to 125°C	5
RTS014N19SHEC03	Receptacle, square flange, 19 positions, size 14, for socket contact, silicone rubber seal, endcap	-40 to 125°C	7

Connector Part Numbers - Plugs

PART NO#	Description	Temperature Range	Figure Drawing
RTS6BS14N19P03	Straight plug with cord grip, 19 positions, size 14, pin contact, silicone rubber seal	-40 to 125°C	8
RTS6BS14N19PHEC03	Straight plug with end cap, 19 positions, size 14, pin contact, silicone rubber seal	-40 to 125°C	10
RTS6BS14N19S03	Straight plug with cord grip, 19 positions, size 14, socket contact, silicone rubber seal	-40 to 125°C	9
RTS6BS14N19SHEC03	Straight plug with end cap, 19 positions, size 14, socket contact, silicone rubber seal	-40 to 125°C	11

Contacts supplied separately see page 164

Shell Size: 14 **Number of Contacts: 19** **Contact Size: 20**
Sealing: IP67 / IP69k **Salt Spray: 500h**

Dimensions Jam Nut Receptacles

Jam Nut Receptacle

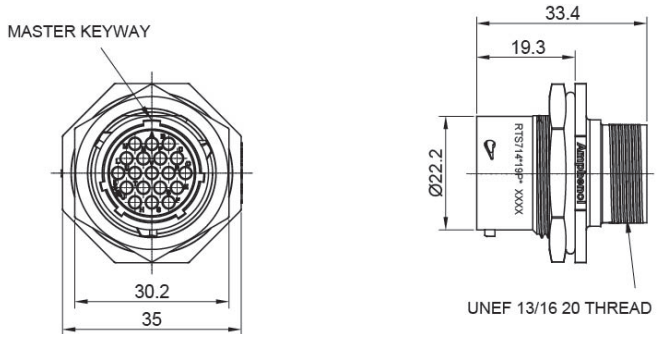

Male Figure 1 RTS714N19P03

Jam Nut Receptacle

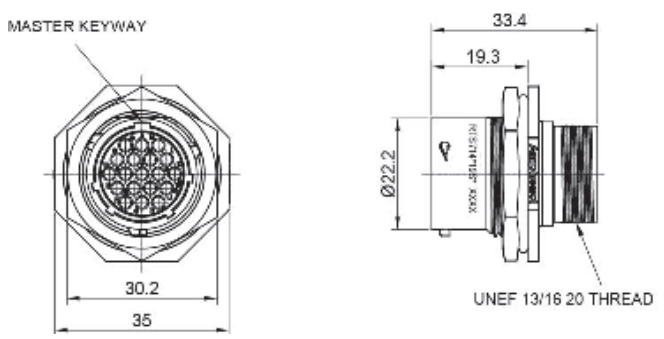

Female Figure 2 RTS714N19S03

Jam Nut Receptacle with Endcap

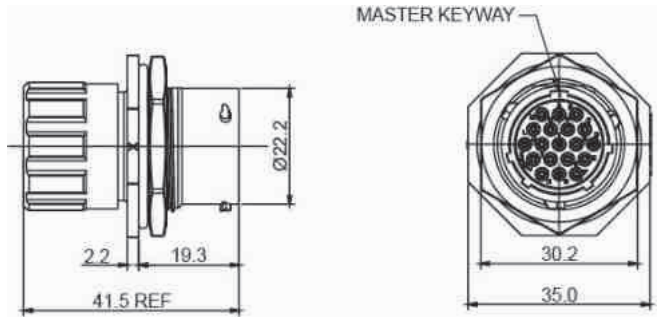

Male Figure 3 RTS714N19PHEC03

Shell Size: 14 Number of Contacts: 19 Contact Size: 20
Sealing: IP67 / IP69k Salt Spray: 500h

Dimensions Square Flange Receptacles

Square Flange Receptacle

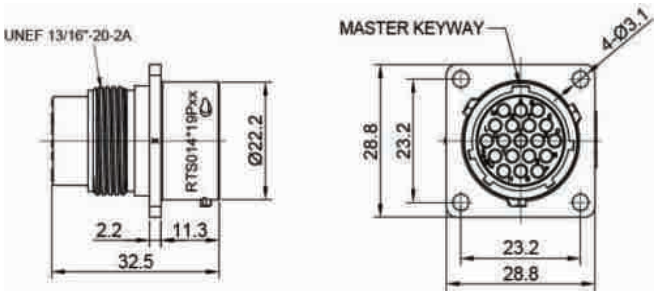

Male Figure 4 RTS014N19P03

Square Flange Receptacle

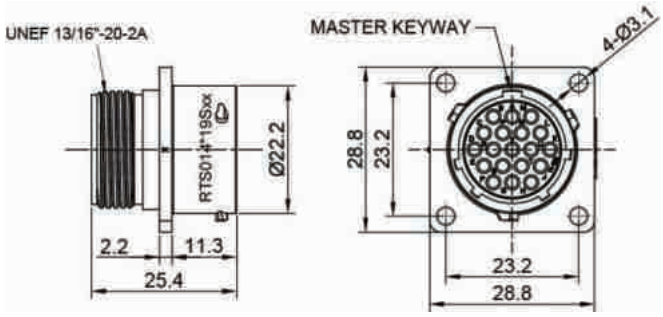

Female Figure 5 RTS014N19S03

Square Flange Receptacle with Endcap

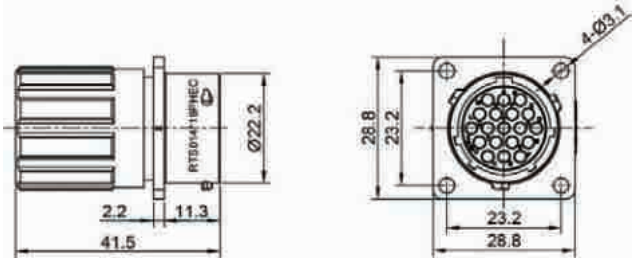

Male Figure 6 RTS014N19PHEC03

Square Flange Receptacle with Endcap

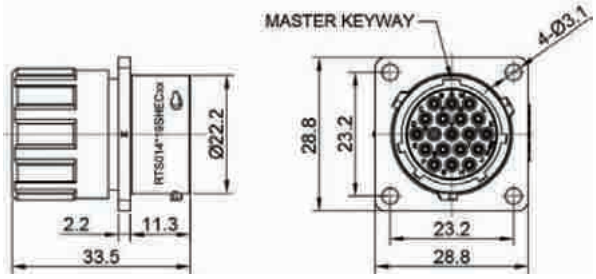

Female Figure 7 RTS014N19SHEC03

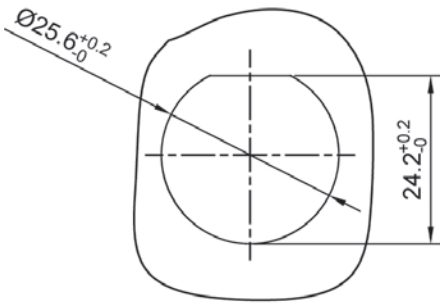

PANEL CUTOUT REFERENCE
THICKNESS:3.2MM (MAX)

Shell Size: 14 Number of Contacts: 19 Contact Size: 20
Sealing: IP67 / IP69k Salt Spray: 500h

Dimensions Plugs

Plug

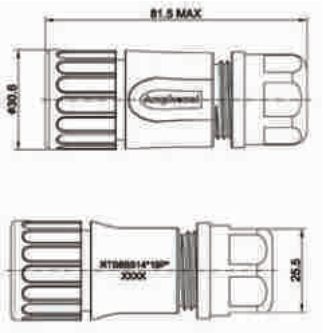

Male Figure 8 RTS6BS14N19P03

Plug

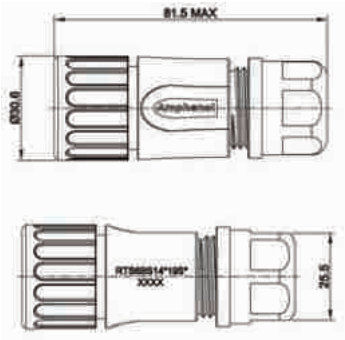

Female Figure 9 RTS6BS14N19S03

Plug with Endcap

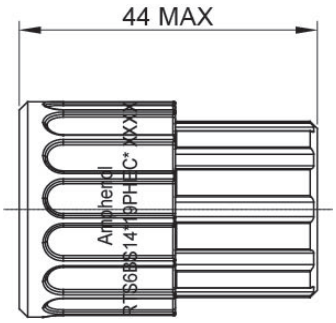

Male Figure 10 RTS6BS14N19PHEC03

Plug with Endcap

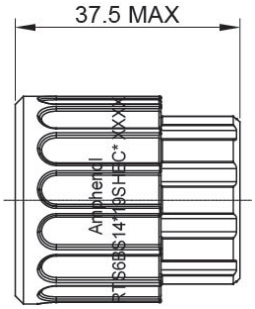

Female Figure 11 RTS6BS14N19SHEC03

Shell Size: 14 Number of Contacts: 19 Contact Size: 20
Sealing: IP67 / IP69k Salt Spray: 500h

Accessories

Dust Cap for Receptacle, Size 14

RTS014DCG

Dust Cap for Plug, Size 14

RTS614NDCG

Sealing Plug, Size 20

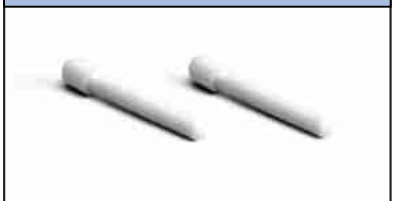

AT13-204-2005

Coding Color Ring, Yellow, Size 14

RTS14CCRY

Coding Color Ring, Green, Size 14

RTS14CCRG

Coding Color Ring, Red, Size 14

RTS14CCRR

Shell Size: 14 **Number of Contacts: 19** **Contact Size: 20**
Sealing: IP67 / IP69k **Salt Spray: 500h**

Contacts

Machined Contacts

Crimp Contacts, Machined

Part Number		AWG	Wire Ranget (mm²)	Plating
Male	Female			
MP20W23F	MS20W23F	22-20	.34-.50	Gold Flash
MP20W23G5	MS20W23G5	22-20	.34-.50	Gold 5µ"
MP20W23G10	MS20W23G10	22-20	.34-.50	Gold 10µ"
MP20W23G15	MS20W23G15	22-20	.34-.50	Gold 15µ"
MP20W23G30	MS20W23G30	22-20	.34-.50	Gold 30µ"
MP24W23F	MS24W23F	26-24	.13-.25	Gold Flash
MP24W23G5	MS24W23G5	26-24	.13-.25	Gold 5µ"
MP24W23G10	MS24W23G10	26-24	.13-.25	Gold 10µ"
MP24W23G15	MS24W23G15	26-24	.13-.25	Gold 15µ"
MP24W23G30	MS24W23G30	26-24	.13-.25	Gold 30µ"
MP28W23F	MS28W23F	30-28	.05-.08	Gold Flash
MP28W23G5	MS28W23G5	30-28	.05-.08	Gold 5µ"
MP28W23G10	MS28W23G10	30-28	.05-.08	Gold 10µ"
MP28W23G15	MS28W23G15	30-28	.05-.08	Gold 15µ"
MP28W23G30	MS28W23G30	30-28	.05-.08	Gold 30µ"

Tools

Contact Extraction Tool, #20 (Ø 1.6) Contact

QXRT20

Hand Crimp Tool for Machined Contacts

MFX-3959

Pneumatic Crimp Tool for Machined Contact

MFX-3957

Shell Size: 14 **Number of Contacts: 19** **Contact Size: 20**
Sealing: IP67 / IP69k **Salt Spray: 500h**

Contacts (con't)

Stamped & Formed Contacts

Crimp Contacts, Stamped & Formed

Part Number		AWG	Wire Range (mm²)	Plating
Male	Female			
SP20W2F	SS20W2F	22-20	.34-.50	Gold Flash
SP20W2G5	SS20W2G5	22-20	.34-.50	Gold 5µ"
SP20W2G10	SS20W2G10	22-20	.34-.50	Gold 10µ"
SP20W2G15	SS20W2G15	22-20	.34-.50	Gold 15µ"
SP20W2G30	SS20W2G30	22-20	.34-.50	Gold 30µ"
SP24W2F	SS24W2F	26-24	.14-.25	Gold Flash
SP24W2G5	SS24W2G5	26-24	.14-.25	Gold 5µ"
SP24W2G10	SS24W2G10	26-24	.14-.25	Gold 10µ"
SP24W2G15	SS24W2G15	26-24	.14-.25	Gold 15µ"
SP24W2G30	SS24W2G30	26-24	.14-.25	Gold 30µ"
SP28W2F	SS28W2F	30-28	.05-.08	Gold Flash
SP28W2G5	SS28W2G5	30-28	.05-.08	Gold 5µ"
SP28W2G10	SS28W2G10	30-28	.05-.08	Gold 10µ"
SP28W2G15	SS28W2G15	30-28	.05-.08	Gold 15µ"
SP28W2G30	SS28W2G30	30-28	.05-.08	Gold 30µ"

Tools

Contact Extraction Tool, #20 (Ø 1.6) Contact

QXRT20

Hand Tool, Stamped & Formed Contact, Size 20 20-28AWG

MFX-3958

Crimp Die for Stamped & Formed Contact

MFX-3957

STEP 1
Choose Receptacle Style

STEP 2
Choose Plug Style

Jam Nut Receptacles

RTS716N19P03

RTS716N19S03

RTS716N19PHEC03

Plug

RTS6BS16N19P03

RTS6BS16N19S03

RTS6BS16N19PHEC03

RTS6BS16N19SHEC03

Square Flange Receptacles

RTS016N19P03

RTS016N19S03

RTS016N19PHEC03

RTS016N19SHEC03

SEE TABLE ON NEXT PAGE FOR PART DETAILS

CONTACTS SOLD SEPARATELY SEE PAGE 172

Shell Size: 16 Number of Contacts: 19 Contact Size: 16
Sealing: IP67 / IP69k Salt Spray: 500h

eco|mate® Aquarius Standard Products

- Suitable For Indoor and Outdoor Applications
- EMI/RMI Shielding Capability with Appropriate Backshell
- Operating Temperature: -40°C to +125°C
- 500 Mating Cycles
- Contacts and Cord Grips Ordered Separately
- UL ECBT2 Certified*

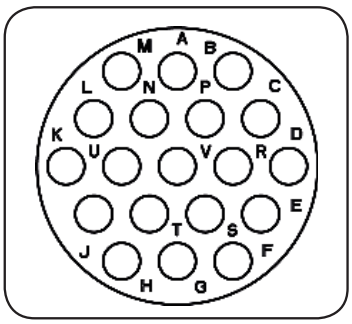

Insert Arrangement
Pin (Male) Faceview

Connector Part Numbers - Receptacles

PART NO#	Description	Temperature Range	Figure Drawing
RTS716N19P03	Receptacle, jam nut, 19 positions, size 16, pin contact, silicone rubber seal	-40 to 125°C	1
RTS716N19PHE03	Receptacle, jam nut, 19 positions, size 16, pin contact, silicone rubber seal, endcap	-40 to 125°C	3
RTS716N19S03	Receptacle, jam nut, 19 positions, size 16, socket contact, silicone rubber seal	-40 to 125°C	2
RTS016N19P03	Receptacle, square flange, 19 positions, size 16, pin contact, silicone rubber seal	-40 to 125°C	5
RTS016N19PHEC03	Receptacle, square flange, 19 positions, size 16, pin contact, silicone rubber seal, endcap	-40 to 125°C	7
RTS016N19S03	Receptacle, square flange, 19 positions, size 16, socket contact, silicone rubber seal	-40 to 125°C	6
RTS016N19SHEC03	Receptacle, square flange, 19 positions, size 16, socket contact, silicone rubber seal, endcap	-40 to 125°C	8

Connector Part Numbers - Plugs

PART NO#	Description	Temperature Range	Figure Drawing
RTS6BS16N19P03	Straight plug with cord grip, 19 positions, size 16, pin contact, silicone rubber seal	-40 to 125°C	9
RTS6BS16N19PHEC03	Straight plug with endcap, 19 positions, size 16, pin contact	-40 to 125°C	11
RTS6BS16N19S03	Straight plug with cord grip, 19 positions, size 16, socket contact, silicone rubber seal	-40 to 125°C	10
RTS6BS16N19SHEC03	Straight plug with endcap, 19 positions, size 16, socket contact	-40 to 125°C	12

Contacts supplied separately see page 172

Shell Size: 16 **Number of Contacts: 19** **Contact Size: 16**
Sealing: IP67 / IP69k **Salt Spray: 500h**

Dimensions Jam Nut Receptacles

Jam Nut Receptacle

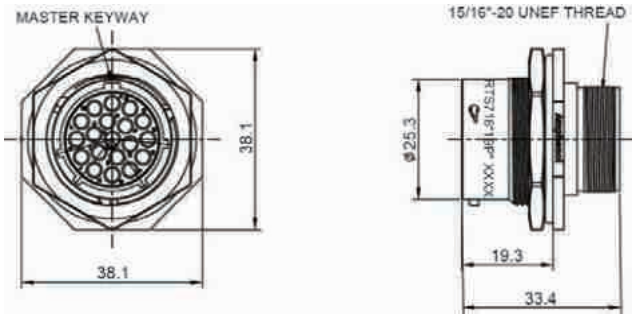

Male Figure 1 RTS716N19P03

Jam Nut Receptacle

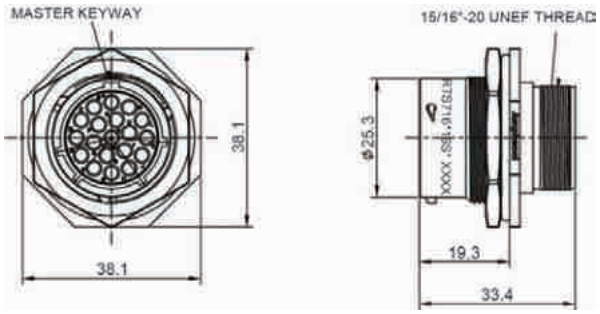

Female Figure 2 RTS716N19S03

Jam Nut Receptacle with Endcap

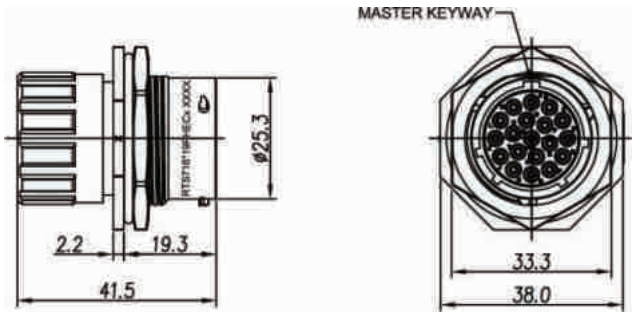

Male Figure 3 RTS716N19PHEC03

Shell Size: 16 Number of Contacts: 19 Contact Size: 16
Sealing: IP67 / IP69k Salt Spray: 500h

Dimensions Square Flange Receptacles

Square Flange Receptacle

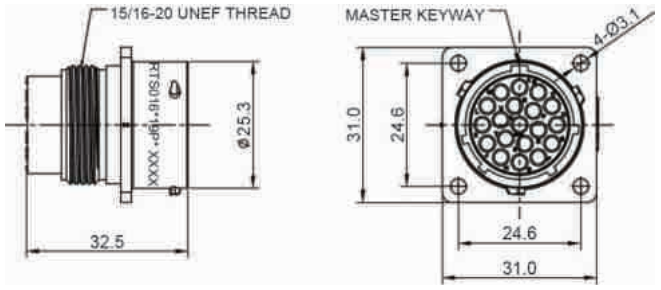

Male Figure 5 RTS016N19P03

Square Flange Receptacle

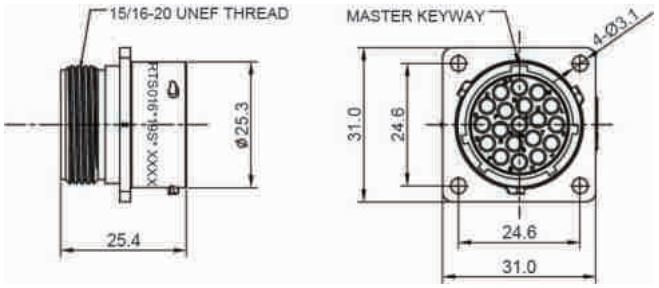

Female Figure 6 RTS016N19S03

Square Flange Receptacle with Endcap

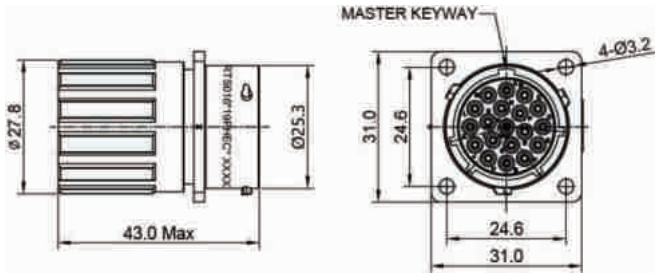

Male Figure 7 RTS016N19PHEC03

Square Flange Receptacle

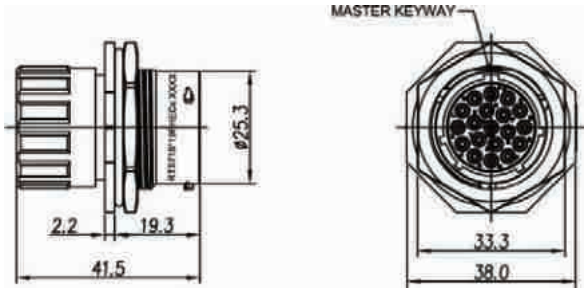

Female Figure 8 RTS016N19SHEC03

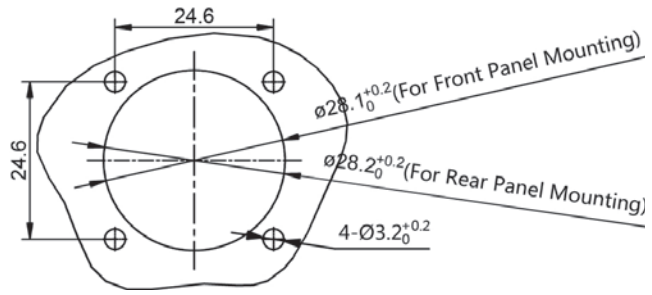

Shell Size: 16 **Number of Contacts: 19** **Contact Size: 16**
Sealing: IP67 / IP69k **Salt Spray: 500h**

Dimensions Plugs

Plug

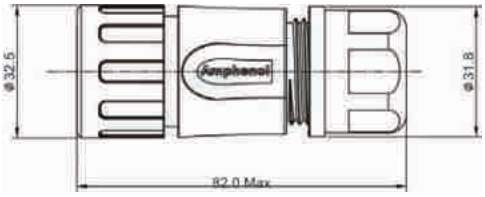

Male Figure 8 RTS6BS16N19P03

Plug

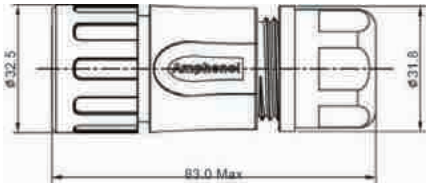

Female Figure 9 RTS6BS16N19S03

Plug with Endcap

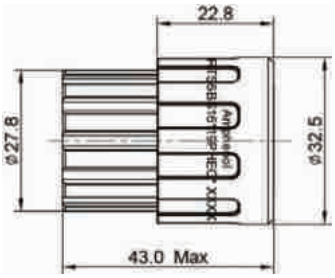

Male Figure 10 RTS6BS16N19PHEC03

Plug with Endcap

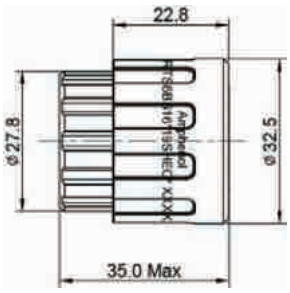

Female Figure 11 RTS6BS16N19SHEC03

Shell Size: 16 Number of Contacts: 19 Contact Size: 16
Sealing: IP67 / IP69k Salt Spray: 500h

Accessories

Dust Cap for Receptacle, Size 16

RTS016DCG

Dust Cap for Plug, Size 16

RTS616NDCG

Sealing Plug, Size 16

A114017-SR

Coding Color Ring, Yellow, Size 16

RTS16CCRY

Coding Color Ring, Green, Size 16

RTS16CCRG

Coding Color Ring, Red, Size 16

RTS16CCRR

Shell Size: 16 **Number of Contacts: 19** **Contact Size: 16**
Sealing: IP67 / IP69k **Salt Spray: 500h**

Contacts

Machined Contacts

Crimp Contacts, Machined

Part Number		AWG	Wire Range (mm²)	Plating
Male	Female			
MP14M23F	MS14M23F	14	2.0-2.5	Gold Flash
MP14M23G5	MS14M23G5	14	2.0-2.5	Gold 5µ"
MP14M23G10	MS14M23G10	14	2.0-2.5	Gold 10µ"
MP14M23G15	MS14M23G15	14	2.0-2.5	Gold 15µ"
MP14M23G30	MS14M23G30	14	2.0-2.5	Gold 30µ"
MP16M23F	MS16M23F	18-16	.75-1.5	Gold Flash
MP16M23G5	MS16M23G5	18-16	.75-1.5	Gold 5µ"
MP16M23G10	MS16M23G10	18-16	.75-1.5	Gold 10µ"
MP16M23G15	MS16M23G15	18-16	.75-1.5	Gold 15µ"
MP16M23G30	MS16M23G30	18-16	.75-1.5	Gold 30µ"
MP20M23F	MS20M23F	22-20	.34-.50	Gold Flash
MP20M23G5	MS20M23G5	22-20	.34-.50	Gold 5µ"
MP20M23G10	MS20M23G10	22-20	.34-.50	Gold 10µ"
MP20M23G15	MS20M23G15	22-20	.34-.50	Gold 15µ"
MP20M23G30	MS20M23G30	22-20	.34-.50	Gold 30µ"
MP24M23F	MS24M23F	26-24	.14-.25	Gold Flash
MP24M23G5	MS24M23G5	26-24	.14-.25	Gold 5µ"
MP24M23G10	MS24M23G10	26-24	.14-.25	Gold 10µ"
MP24M23G15	MS24M23G15	26-24	.14-.25	Gold 15µ"
MP24M23G30	MS24M23G30	26-24	.14-.25	Gold 30µ"

Tools

Contact Extraction Tool, #16 (Ø 1.6) Contact

QXRT16

Hand Crimp Tool for Machined Contacts

MFX-3959

Pneumatic Crimp Tool for Machined Contacts

MFX-3960

Shell Size: 16 **Number of Contacts: 19** **Contact Size: 16**
Sealing: IP67 / IP69k **Salt Spray: 500h**

Contacts (con't)

Stamped & Formed Contacts

Crimp Contacts, Stamped & Formed

Part Number		AWG	Wire Range (mm²)	Plating
Male	Female			
SP14M2F	SS14M2F	14	2.0-2.5	Gold Flash
SP14M2G5	SS14M2G5	14	2.0-2.5	Gold 5µ"
SP14M2G10	SS14M2G10	14	2.0-2.5	Gold 10µ"
SP14M2G15	SS14M2G15	14	2.0-2.5	Gold 15µ"
SP14M2G30	SS14M2G30	14	2.0-2.5	Gold 30µ"
SP16M2F	SS16M2F	18-16	.75-1.5	Gold Flash
SP16M2G5	SS16M2G5	18-16	.75-1.5	Gold 5µ"
SP16M2G10	SS16M2G10	18-16	.75-1.5	Gold 10µ"
SP16M2G15	SS16M2G15	18-16	.75-1.5	Gold 15µ"
SP16M2G30	SS16M2G30	18-16	.75-1.5	Gold 30µ"
SP20M2F	SS20M2F	22-20	.34-.50	Gold Flash
SP20M2G5	SS20M2G5	22-20	.34-.50	Gold 5µ"
SP20M2G10	SS20M2G10	22-20	.34-.50	Gold 10µ"
SP20M2G15	SS20M2G15	22-20	.34-.50	Gold 15µ"
SP20M2G30	SS20M1G30	22-20	.34-.50	Gold 30µ"
SP24M2F	SS24M2F	26-24	.14-.25	Gold Flash
SP24M2G5	SS24M2G5	26-24	.14-.25	Gold 5µ"
SP24M2G10	SS24M2G10	26-24	.14-.25	Gold 10µ"
SP24M2G15	SS24M2G15	26-24	.14-.25	Gold 15µ"
SP24M2G30	SS24M2G30	26-24	.14-.25	Gold 30µ"

Tools

Contact Extraction Tool, #16 (Ø 1.6) Contact

QXRT16

Hand Tool, Stamped & Formed Contact, Size16, 20-14 AWG

MFX-3954

Crimp Die for Stamped & Formed Contact

MFX-3957

STEP 1
Choose Receptacle Style

STEP 2
Choose Plug Style

SEE TABLE ON NEXT PAGE FOR PART DETAILS

CONTACTS SOLD SEPARATELY SEE PAGE 180

Jam Nut Receptacles

RTS718N23P03

RTS718N23S03

RTS718N23PHEC03

Square Flange Receptacles

RTS018N23P03

RTS018N23S03

RTS018N23PHEC03

RTS018N23SHEC03

Plug

RTS6BS18N23P03

RTS6BS18N23S03

RTS6BS18N23PHEC03

RTS6BS18N23SHEC03

Shell Size: 18 Number of Contacts: 23 Contact Size: 16
Sealing: IP67 / IP69k Salt Spray: 500h

eco|mate® Aquarius Standard Products

- Suitable For Indoor and Outdoor Applications
- EMI/RMI Shielding Capability with Appropriate Backshell
- Operating Temperature: -40°C to +125°C
- 500 Mating Cycles
- Contacts and Cord Grips Ordered Separately
- UL ECBT2 Certified*

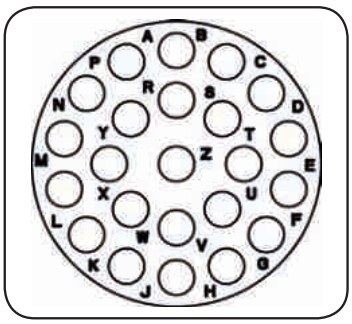

Insert Arrangement
Pin (Male) Faceview

Connector Part Numbers - Receptacles

PART NO#	Description	Temperature Range	Figure Drawing
RTS718N23P03	Receptacle, jam nut, 23 positions, size 18, pin contact, silicone rubber seal	-40 to 125°C	1
RTS718N23PHEC03	Receptacle, jam nut, 23 positions, size 18, pin contact, silicone rubber seal, endcap	-40 to 125°C	3
RTS718N23S03	Receptacle, jam nut, 23 positions, size 18, socket contact, silicone rubber seal, endcap	-40 to 125°C	2
RTS018N23P03	Receptacle, square flange, 23 positions, size 18, pin contact, silicone rubber seal	-40 to 125°C	4
RTS018N23PHEC03	Receptacle, square flange, 23 positions, size 18, pin contact, silicone rubber seal, endcap	-40 to 125°C	6
RTS018N23S03	Receptacle, square flange, 23 positions, size 18, socket contact, silicone rubber seal	-40 to 125°C	5
RTS018N23SHEC03	Receptacle, square flange, 23 positions, size 18, socket contact, silicone rubber seal, with endcap	-40 to 125°C	7

Connector Part Numbers - Plugs

PART NO#	Description	Temperature Range	Figure Drawing
RTS6BS18N23P03	Straight plug with cord grip, 23 positions, size 18, pin contact, silicone rubber seal	-40 to 125°C	8
RTS6BS18N23PHEC03	Straight plug with endcap, 23 positions, size 18, pin contact, endcap	-40 to 125°C	10
RTS6BS18N23S03	Straight plug with cord grip, 23 positions, size 18, socket contact, silicone rubber seal	-40 to 125°C	9
RTS6BS18N23SHEC03	Straight plug with endcap, 23 positions, size 18, socket contact, endcap	-40 to 125°C	11

Contacts supplied separately see page 180

Shell Size: 18 **Number of Contacts: 23** **Contact Size: 16**
Sealing: IP67 / IP69k **Salt Spray: 500h**

Dimensions Jam Nut

Jam Nut Receptacle

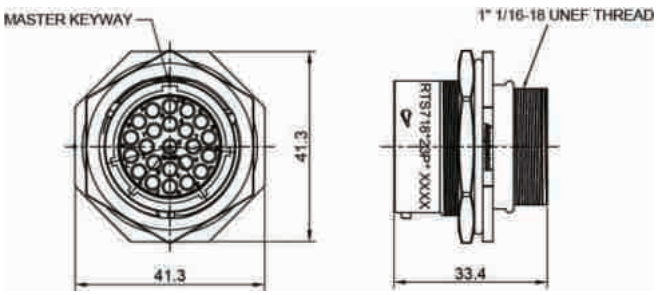

Male Figure 1 RTS718N23P03

Jam Nut Receptacle

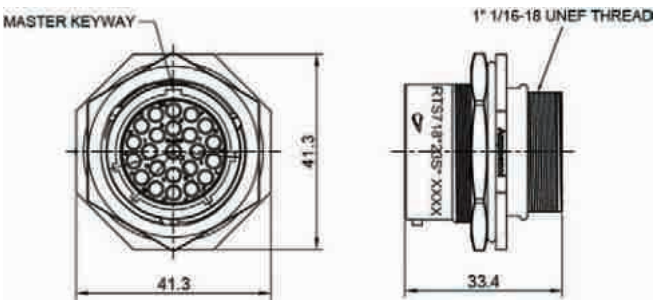

Female Figure 2 RTS718N23S03

Jam Nut Receptacle with Endcap

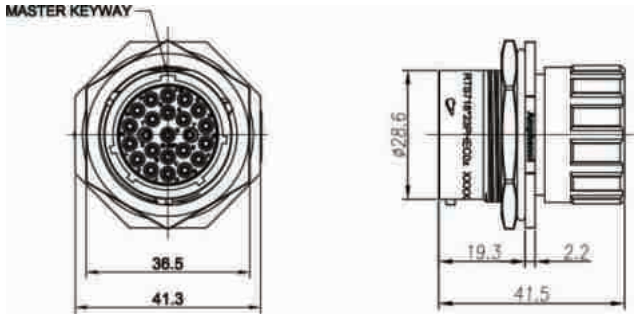

Male Figure 3 RTS718N23PHEC03

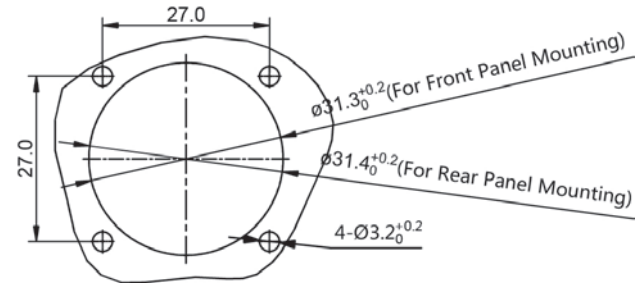

Shell Size: 18 Number of Contacts: 23 Contact Size: 16
Sealing: IP67 / IP69k Salt Spray: 500h

Dimensions Square Flange Receptacles

Square Flange Receptacle

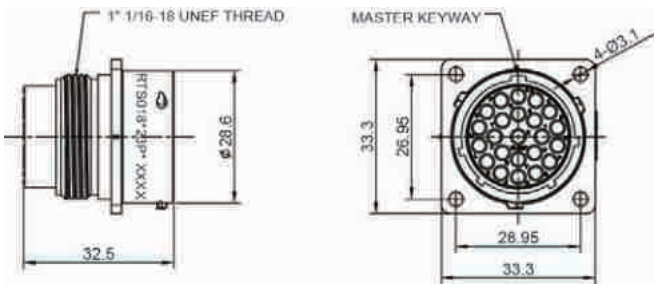

Male Figure 4 RTS018N23P03

Square Flange Receptacle

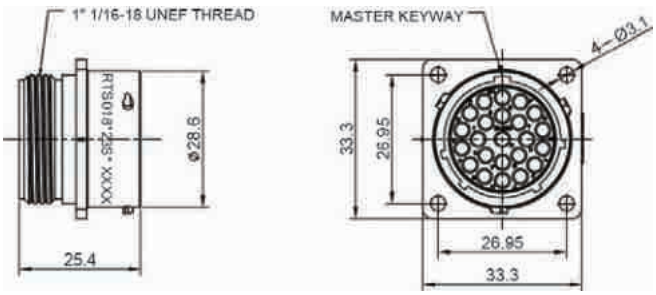

Female Figure 5 RTS018N23S03

Square Flange Receptacle with Endcap

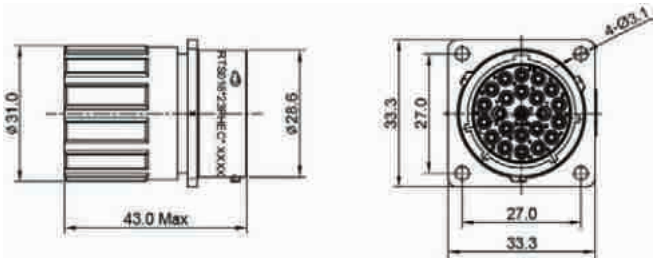

Male Figure 6 RTS018N23PHEC03

Square Flange Receptacle with Endcap

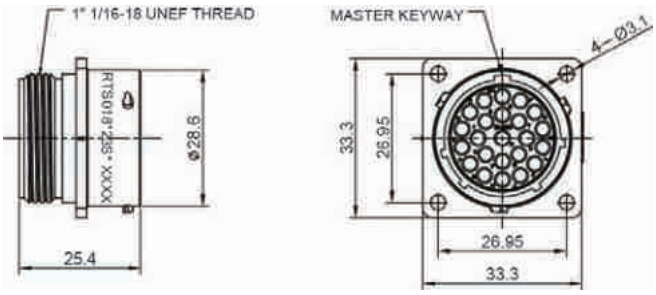

Female Figure 7 RTS018N23SHEC03

Shell Size: 18 **Number of Contacts: 23** **Contact Size: 16**
Sealing: IP67 / IP69k **Salt Spray: 500h**

Dimensions Plugs

Plug

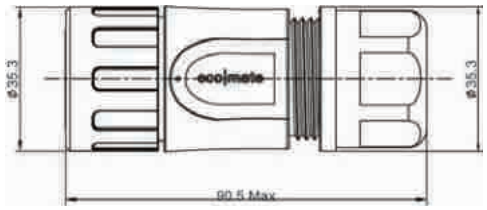

Male Figure 8 RTS6BS18N23P03

Plug

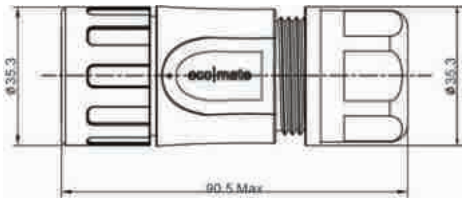

Female Figure 9 RTS6BS18N23S03

Plug with Endcap

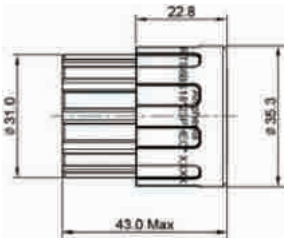

Male Figure 10 RTS6BS18N23PHEC03

Plug with Endcap

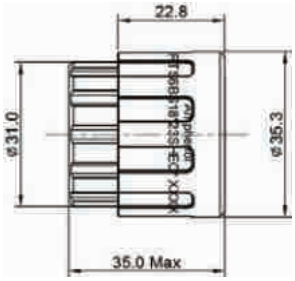

Female Figure 11 RTS6BS18N23SHEC03

Shell Size: 18 Number of Contacts: 23 Contact Size: 16
Sealing: IP67 / IP69k Salt Spray: 500h

Accessories

Dust Cap for Plug, Size 18

RTS618NDCG

Dust Cap for Receptacle, Size 18

RTS018DCG

Sealing Plug, Size 16

A114017-SR

Coding Color Ring, Yellow, Size 18

RTS18CCRY

Coding Color Ring, Green, Size 18

RTS18CCRG

Coding Color Ring, Red, Size 18

RTS18CCRR

Shell Size: 18 **Number of Contacts: 23** **Contact Size: 16**
Sealing: IP67 / IP69k **Salt Spray: 500h**

Contacts

Machined Contacts

Crimp Contacts, Machined

Part Number		AWG	Wire Range (mm²)	Plating
Male	Female			
MP14M23F	MS14M23F	14	2.0-2.5	Gold Flash
MP14M23G5	MS14M23G5	14	2.0-2.5	Gold 5µ"
MP14M23G10	MS14M23G10	14	2.0-2.5	Gold 10µ"
MP14M23G15	MS14M23G15	14	2.0-2.5	Gold 15µ"
MP14M23G30	MS14M23G30	14	2.0-2.5	Gold 30µ"
MP16M23F	MS16M23F	18-16	.75-1.5	Gold Flash
MP16M23G5	MS16M23G5	18-16	.75-1.5	Gold 5µ"
MP16M23G10	MS16M23G10	18-16	.75-1.5	Gold 10µ"
MP16M23G15	MS16M23G15	18-16	.75-1.5	Gold 15µ"
MP16M23G30	MS16M23G30	18-16	.75-1.5	Gold 30µ"
MP20M23F	MS20M23F	22-20	.34-.50	Gold Flash
MP20M23G5	MS20M23G5	22-20	.34-.50	Gold 5µ"
MP20M23G10	MS20M23G10	22-20	.34-.50	Gold 10µ"
MP20M23G15	MS20M23G15	22-20	.34-.50	Gold 15µ"
MP20M23G30	MS20M23G30	22-20	.34-.50	Gold 30µ"
MP24M23F	MS24M23F	26-24	.14-.25	Gold Flash
MP24M23G5	MS24M23G5	26-24	.14-.25	Gold 5µ"
MP24M23G10	MS24M23G10	26-24	.14-.25	Gold 10µ"
MP24M23G15	MS24M23G15	26-24	.14-.25	Gold 15µ"
MP24M23G30	MS24M23G30	26-24	.14-.25	Gold 30µ"

Tools

Contact Extraction Tool, #16 (Ø 1.6) Contact

QXRT16

Hand Crimp Tool for Machined Contacts

MFX-3959

Pneumatic Crimp Tool for Machined Contacts

MFX-3960

Shell Size: 18 **Number of Contacts: 23** **Contact Size: 16**
Sealing: IP67 / IP69k **Salt Spray: 500h**

Contacts (con't)

Stamped & Formed Contacts

Crimp Contacts, Stamped & Formed

Part Number		AWG	Wire Range (mm²)	Plating
Male	Female			
SP14M2F	SS14M2F	14	2.0-2.5	Gold Flash
SP14M2G5	SS14M2G5	14	2.0-2.5	Gold 5µ"
SP14M2G10	SS14M2G10	14	2.0-2.5	Gold 10µ"
SP14M2G15	SS14M2G15	14	2.0-2.5	Gold 15µ"
SP14M2G30	SS14M2G30	14	2.0-2.5	Gold 30µ"
SP16M2F	SS16M2F	18-16	.75-1.5	Gold Flash
SP16M2G5	SS16M2G5	18-16	.75-1.5	Gold 5µ"
SP16M2G10	SS16M2G10	18-16	.75-1.5	Gold 10µ"
SP16M2G15	SS16M2G15	18-16	.75-1.5	Gold 15µ"
SP16M2G30	SS16M2G30	18-16	.75-1.5	Gold 30µ"
SP20M2F	SS20M2F	22-20	.34-.50	Gold Flash
SP20M2G5	SS20M2G5	22-20	.34-.50	Gold 5µ"
SP20M2G10	SS20M2G10	22-20	.34-.50	Gold 10µ"
SP20M2G15	SS20M2G15	22-20	.34-.50	Gold 15µ"
SP20M2G30	SS20M1G30	22-20	.34-.50	Gold 30µ"
SP24M2F	SS24M2F	26-24	.14-.25	Gold Flash
SP24M2G5	SS24M2G5	26-24	.14-.25	Gold 5µ"
SP24M2G10	SS24M2G10	26-24	.14-.25	Gold 10µ"
SP24M2G15	SS24M2G15	26-24	.14-.25	Gold 15µ"
SP24M2G30	SS24M2G30	26-24	.14-.25	Gold 30µ"

Tools

Contact Extraction Tool, #16 (Ø 1.6) Contact

QXRT16

Hand Tool, Stamped & Formed Contact, Size 16, 20-14 AWG

MFX-3954

Crimp Die for Stamped & Formed Contact

MFX-3957

STEP 1
Choose Receptacle Style

STEP 2
Choose Plug Style

SEE TABLE ON NEXT PAGE FOR PART DETAILS

CONTACTS SOLD SEPARATELY SEE PAGE 188

Jam Nut Receptacles

RTS716N26P03

RTS716N26S03

RTS716N26PHEC03

Square Flange Receptacles

RTS016N26P03

RTS016N26S03

RTS016N26PHEC03

RTS016N26SHEC03

Plug

RTS6BS16N26P03

RTS6BS16N26S03

RTS6BS16N26PHEC03

RTS6BS16N26SHEC03

Shell Size: 16 Number of Contacts: 26 Contact Size: 20
Sealing: IP67 / IP69k Salt Spray: 500h

eco|mate® Aquarius Standard Products

- Suitable For Indoor and Outdoor Applications
- EMI/RMI Shielding Capability with Appropriate Backshell
- Operating Temperature: -40°C to +125°C
- 500 Mating Cycles
- Contacts and Cord Grips Ordered Separately
- UL ECBT2 Certified*

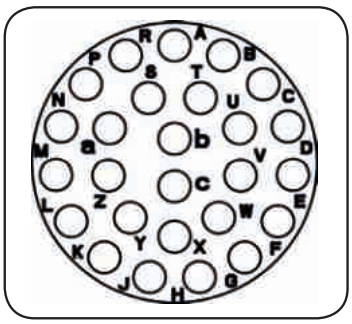

Insert Arrangement
Pin (Male) Faceview

Connector Part Numbers - Receptacles

PART NO#	Description	Temperature Range	Figure Drawing
RTS716N26P03	Receptacle, jam nut, 26 positions, size 16, pin contact, silicone rubber seal	-40 to 125°C	1
RTS716N26PHEC03	Receptacle, jam nut, 26 positions, size 16, pin contact, silicone rubber seal, endcap	-40 to 125°C	3
RTS716N26S03	Receptacle, jam nut, 26 positions, size 16, for socket contact, silicone rubber seal	-40 to 125°C	2
RTS016N26P03	Receptacle, square flange, 26 positions, size 16, pin contact, silicone rubber seal	-40 to 125°C	4
RTS016N26PHEC03	Receptacle, square flange, 26 positions, size 16, pin contact, silicone rubber seal, endcap	-40 to 125°C	6
RTS016N26S03	Receptacle, square flange, 26 positions, size 16, for socket contact, silicone rubber seal	-40 to 125°C	5
RTS016N26SHEC03	Receptacle, square flange, 26 positions, size 16, for socket contact, silicone rubber seal,with endcap	-40 to 125°C	7

Connector Part Numbers - Plugs

PART NO#	Description	Temperature Range	Figure Drawing
RTS6BS16N26P03	Straight plug with cord grip, 26 positions, size 16, pin contact, silicone rubber seal	-40 to 125°C	8
RTS6BS16N26PHEC03	Straight plug with end cap, 26 positions, size 16, pin contact, silicone rubber seal	-40 to 125°C	10
RTS6BS16N26S03	Straight plug with cord grip, 26 positions, size 16, socket contact, silicone rubber seal	-40 to 125°C	9
RTS6BS16N26SHEC03	Straight plug with end cap, 26 positions, size 16, socket contact, silicone rubber seal	-40 to 125°C	11

Contacts supplied separately see page 188

Shell Size: 16 **Number of Contacts: 26** **Contact Size: 20**
Sealing: IP67 / IP69k **Salt Spray: 500h**

Dimensions Jam Nut

Jam Nut Receptacle

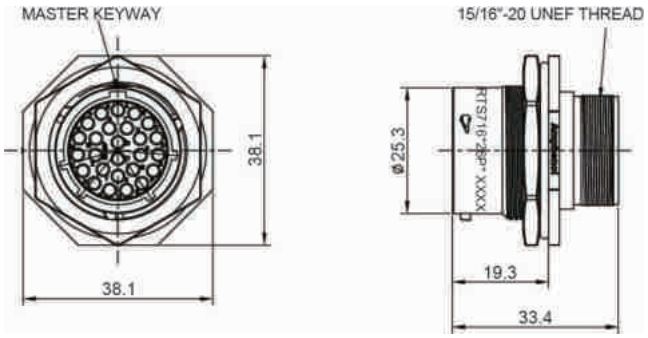

Male Figure 1 RTS716N26P03

Jam Nut Receptacle

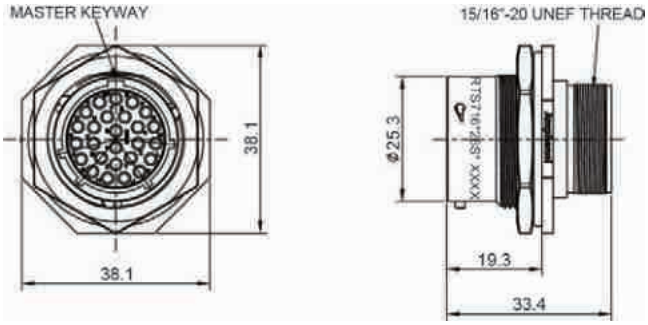

Female Figure 2 RTS716N26S03

Jam Nut Receptacle with Endcap

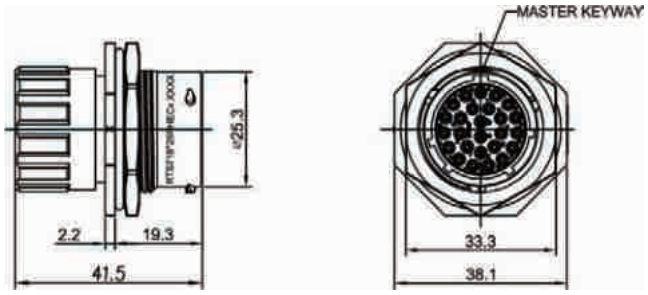

Male Figure 3 RTS716N26PHEC03

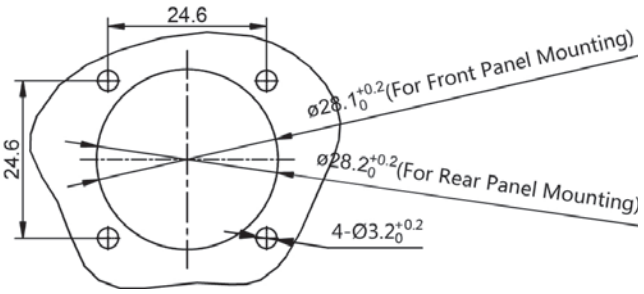

Shell Size: 16 Number of Contacts: 26 Contact Size: 20
Sealing: IP67 / IP69k Salt Spray: 500h

Dimensions Square Flange Receptacles

Square Flange Receptacle

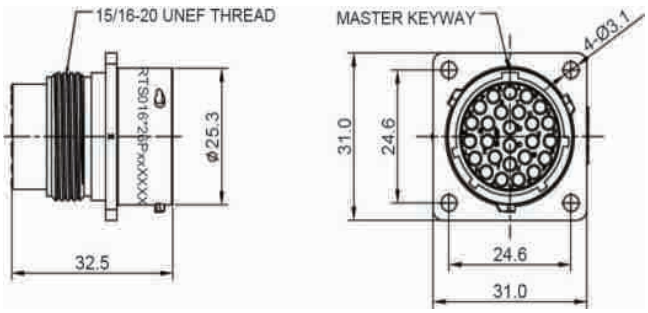

Male Figure 4 RTS016N26P03

Square Flange Receptacle

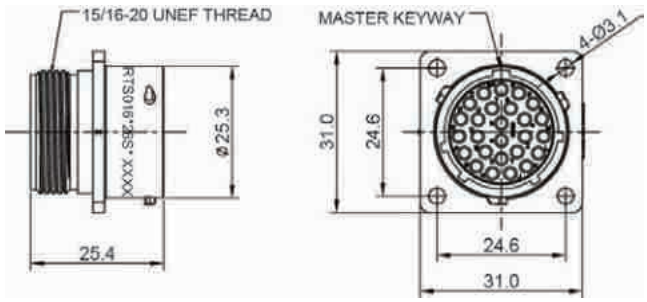

Female Figure 5 RTS016N26S03

Square Flange Receptacle with Endcap

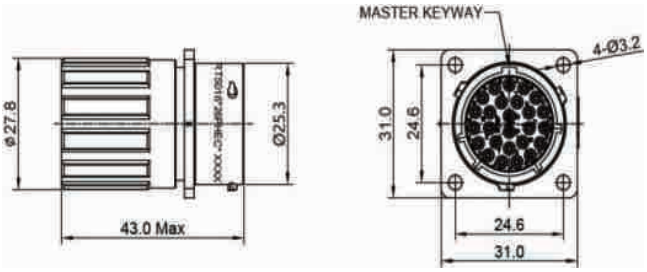

Male Figure 6 RTS016N26PHEC03

Square Flange Receptacle with Endcap

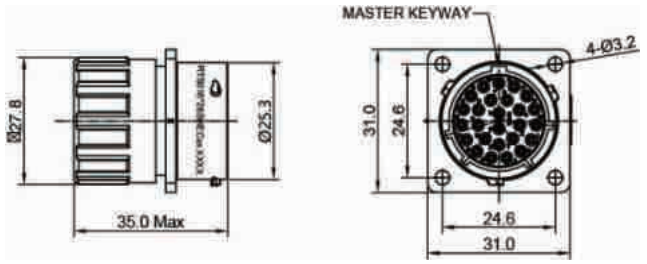

Female Figure 3 RTS016N26SHEC03

Shell Size: 16 **Number of Contacts: 26** **Contact Size: 20**
Sealing: IP67 / IP69k **Salt Spray: 500h**

Dimensions Plugs

Plug

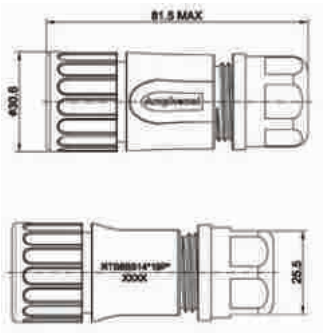

Male Figure 8 RTS6BS14N19P03

Plug

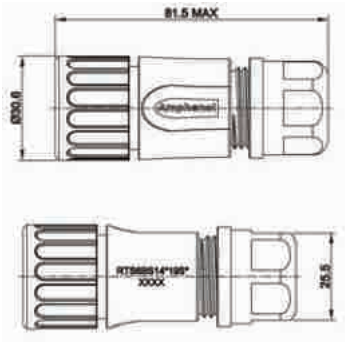

Female Figure 9 RTS6BS14N19S03

Plug with Endcap

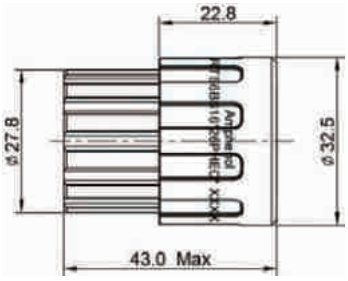

Male Figure 10 RTS6BS16N26PHEC03

Plug with Endcap

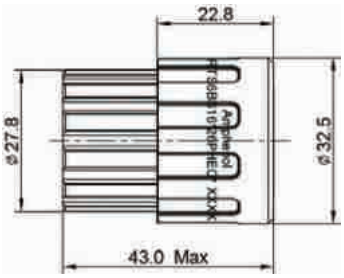

Female Figure 11 RTS6BS16N26SHEC03

Shell Size: 16 Number of Contacts: 26 Contact Size: 20
Sealing: IP67 / IP69k Salt Spray: 500h

Accessories

Dust Cap for Receptacle, Size 16

RTS016DCG

Dust Cap for Plug, Size 16

RTS616NDCG

Sealing Plug, Size 20

AT13-204-2005

Coding Color Ring, Yellow, Size 16

RTS16CCRY

Coding Color Ring, Green, Size 16

RTS16CCRG

Coding Color Ring, Red, Size 16

RTS16CCRR

Shell Size: 16 **Number of Contacts: 26** **Contact Size: 20**
Sealing: IP67 / IP69k **Salt Spray: 500h**

Contacts

Machined Contacts

Crimp Contacts, Machined

Part Number		AWG	Wire Ranget (mm²)	Plating
Male	Female			
MP20W23F	MS20W23F	22-20	.34-.50	Gold Flash
MP20W23G5	MS20W23G5	22-20	.34-.50	Gold 5µ"
MP20W23G10	MS20W23G10	22-20	.34-.50	Gold 10µ"
MP20W23G15	MS20W23G15	22-20	.34-.50	Gold 15µ"
MP20W23G30	MS20W23G30	22-20	.34-.50	Gold 30µ"
MP24W23F	MS24W23F	26-24	.13-.25	Gold Flash
MP24W23G5	MS24W23G5	26-24	.13-.25	Gold 5µ"
MP24W23G10	MS24W23G10	26-24	.13-.25	Gold 10µ"
MP24W23G15	MS24W23G15	26-24	.13-.25	Gold 15µ"
MP24W23G30	MS24W23G30	26-24	.13-.25	Gold 30µ"
MP28W23F	MS28W23F	30-28	.05-.08	Gold Flash
MP28W23G5	MS28W23G5	30-28	.05-.08	Gold 5µ"
MP28W23G10	MS28W23G10	30-28	.05-.08	Gold 10µ"
MP28W23G15	MS28W23G15	30-28	.05-.08	Gold 15µ"
MP28W23G30	MS28W23G30	30-28	.05-.08	Gold 30µ"

Tools

Contact Extraction Tool, #20 (Ø 1.6) Contact

QXRT20

Hand Crimp Tool for Machined Contacts

MFX-3959

Pneumatic Crimp Tool for Machined Contact

MFX-3957

Shell Size: 16 **Number of Contacts: 26** **Contact Size: 20**
Sealing: IP67 / IP69k **Salt Spray: 500h**

Contacts (con't)

Stamped & Formed Contacts

Crimp Contacts, Stamped & Formed

Part Number		AWG	Wire Range (mm²)	Plating
Male	Female			
SP20W2F	SS20W2F	22-20	.34-.50	Gold Flash
SP20W2G5	SS20W2G5	22-20	.34-.50	Gold 5µ"
SP20W2G10	SS20W2G10	22-20	.34-.50	Gold 10µ"
SP20W2G15	SS20W2G15	22-20	.34-.50	Gold 15µ"
SP20W2G30	SS20W2G30	22-20	.34-.50	Gold 30µ"
SP24W2F	SS24W2F	26-24	.14-.25	Gold Flash
SP24W2G5	SS24W2G5	26-24	.14-.25	Gold 5µ"
SP24W2G10	SS24W2G10	26-24	.14-.25	Gold 10µ"
SP24W2G15	SS24W2G15	26-24	.14-.25	Gold 15µ"
SP24W2G30	SS24W2G30	26-24	.14-.25	Gold 30µ"
SP28W2F	SS28W2F	30-28	.05-.08	Gold Flash
SP28W2G5	SS28W2G5	30-28	.05-.08	Gold 5µ"
SP28W2G10	SS28W2G10	30-28	.05-.08	Gold 10µ"
SP28W2G15	SS28W2G15	30-28	.05-.08	Gold 15µ"
SP28W2G30	SS28W2G30	30-28	.05-.08	Gold 30µ"

Tools

Contact Extraction Tool, #20 (Ø 1.6) Contact

QXRT20

Hand Tool, Stamped & Formed Contact, Size 20 20-28AWG

MFX-3958

Crimp Die for Stamped & Formed Contact

MFX-3957

STEP 1
Choose Receptacle Style

STEP 2
Choose Plug Style

Jam Nut Receptacles

RTS718N32P03

RTS718N32S03

RTS718N32PHEC03

Square Flange Receptacles

RTS018N32P03

RTS018N32S03

RTS018N32PHEC03

RTS018N32SHEC03

Plug

RTS6BS18N32P03

RTS6BS18N32S03

RTS6BS18N32PHEC03

RTS6BS18N32SHEC03

SEE TABLE ON NEXT PAGE FOR PART DETAILS

CONTACTS SOLD SEPARATELY SEE PAGE 196

Shell Size: 18 Number of Contacts: 32 Contact Size: 20
Sealing: IP67 / IP69k Salt Spray: 500h

eco|mate® Aquarius Standard Products

- Suitable For Indoor and Outdoor Applications
- EMI/RMI Shielding Capability with Appropriate Backshell
- Operating Temperature: -40°C to +125°C
- 500 Mating Cycles
- Contacts and Cord Grips Ordered Separately
- UL ECBT2 Certified*

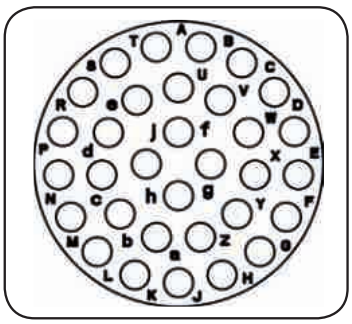

Insert Arrangement
Pin (Male) Faceview

Connector Part Numbers - Receptacles

PART NO#	Description	Temperature Range	Figure Drawing
RTS718N32P03	Receptacle, jam nut, 32 positions, size 18, pin contact, silicone rubber seal	-40 to 125°C	1
RTS718N32PHEC03	Receptacle, jam nut, 32 positions, size 18, pin contact, silicone rubber seal, endcap	-40 to 125°C	3
RTS718N32S03	Receptacle, jam nut, 32 positions, size 18, for socket contact, silicone rubber seal	-40 to 125°C	2
RTS018N32P03	Receptacle, square flange, 32 positions, size 18, pin contact, silicone rubber seal	-40 to 125°C	4
RTS018N32PHEC03	Receptacle, square flange, 32 positions, size 18, pin contact, silicone rubber seal, endcap	-40 to 125°C	6
RTS018N32S03	Receptacle, square flange, 32 positions, size 18, for socket contact, silicone rubber seal	-40 to 125°C	5
RTS018N32SHEC03	Receptacle, square flange, 32 positions, size 18, for socket contact, silicone rubber seal, with endcap	-40 to 125°C	7

Connector Part Numbers - Plugs

PART NO#	Description	Temperature Range	Figure Drawing
RTS6BS18N32P03	Straight plug with cord grip, 32 positions, size 18, pin contact, silicone rubber seal	-40 to 125°C	8
RTS6BS18N32PHEC03	Straight plug with end cap, 32 positions, size 18, pin contact, silicone rubber seal	-40 to 125°C	10
RTS6BS18N32S03	Straight plug with cord grip, 32 positions, size 18, socket contact, silicone rubber seal	-40 to 125°C	9
RTS6BS18N32SHEC03	Straight plug with end cap, 32 positions, size 18, socket contact, silicone rubber seal	-40 to 125°C	11

Contacts supplied separately see page 196

Shell Size: 18 **Number of Contacts: 32** **Contact Size: 20**
Sealing: IP67 / IP69k **Salt Spray: 500h**

Dimensions Jam Nut

Jam Nut Receptacle

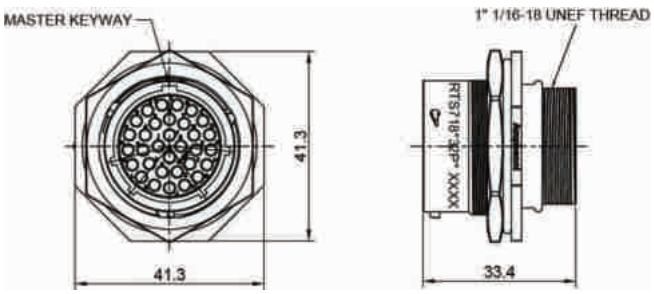

Male Figure 1 RTS718N32P03

Jam Nut Receptacle

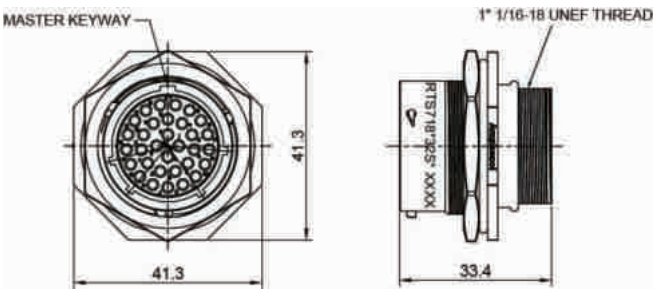

Female Figure 2 RTS718N32S03

Jam Nut Receptacle with Endcap

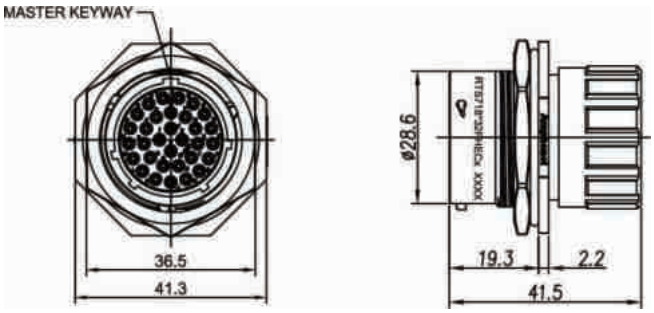

Male Figure 3 RTS718N32PHEC03

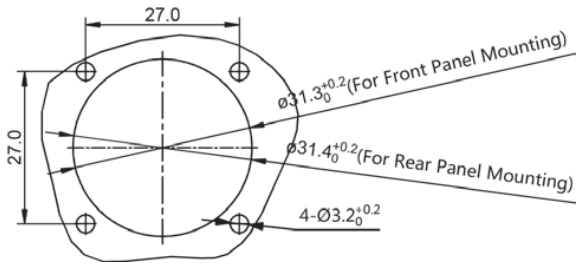

Shell Size: 18 Number of Contacts: 32 Contact Size: 20
Sealing: IP67 / IP69k Salt Spray: 500h

Dimensions Square Flange Receptacles

Square Flange Receptacle

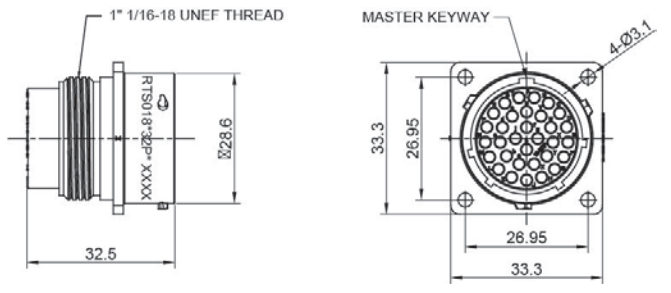

Male Figure 4 RTS018N32P03

Square Flange Receptacle

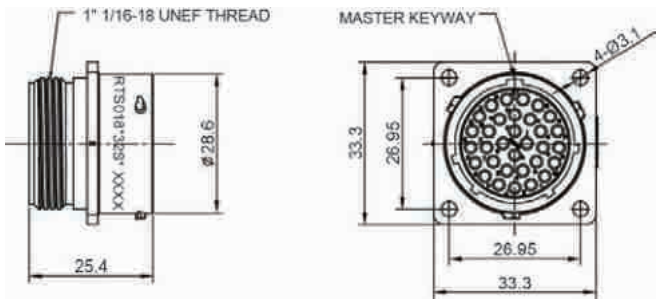

Female Figure 5 RTS018N32S03

Square Flange Receptacle with Endcap

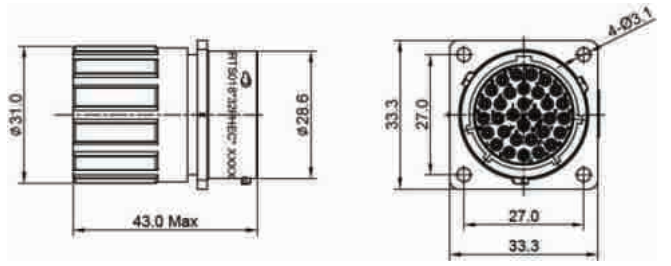

Male Figure 6 RTS018N32PHEC03

Square Flange Receptacle with Endcap

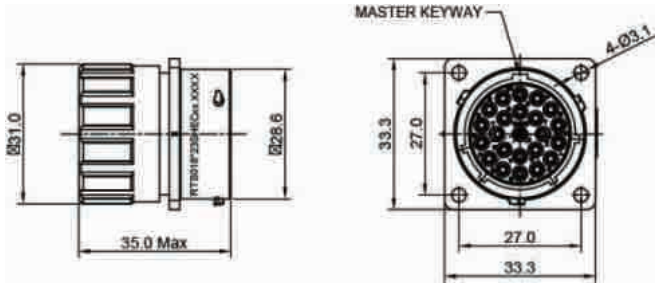

Female Figure 7 RTS018N32SHEC03

Shell Size: 18 **Number of Contacts: 32** **Contact Size: 20**
Sealing: IP67 / IP69k **Salt Spray: 500h**

Dimensions Plugs

Plug

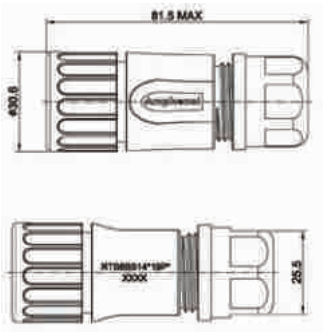

Male Figure 8 RTS6BS14N19P03

Plug

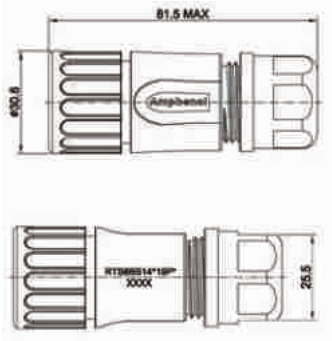

Female Figure 9 RTS6BS14N19S03

Plug with Endcap

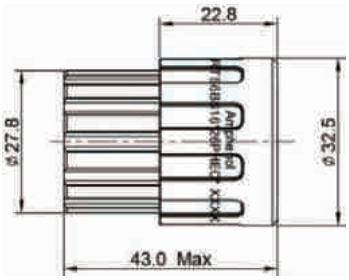

Male Figure 10 RTS6BS16N26PHEC03

Plug with Endcap

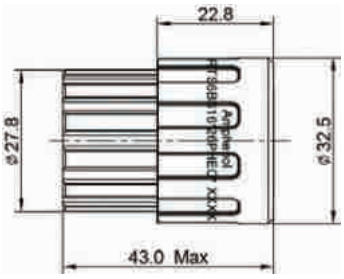

Female Figure 11 RTS6BS16N26SHEC03

Shell Size: 18 Number of Contacts: 32 Contact Size: 20
Sealing: IP67 / IP69k Salt Spray: 500h

Accessories

Dust Cap for Plug, Size 18

RTS618NDCG

Dust Cap for Receptacle, Size 18

RTS018DCG

Sealing Plug, Size 20

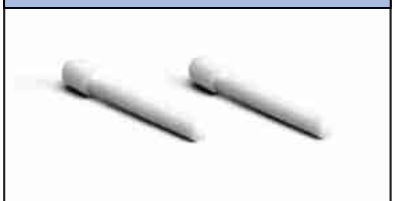

AT13-204-2005

Coding Color Ring, Yellow, Size 18

RTS18CCRY

Coding Color Ring, Green, Size 18

RTS18CCRG

Coding Color Ring, Red, Size 18

RTS18CCRR

Shell Size: 18 **Number of Contacts: 32** **Contact Size: 20**
Sealing: IP67 / IP69k **Salt Spray: 500h**

Contacts

Machined Contacts

Crimp Contacts, Machined

Part Number		AWG	Wire Ranget (mm²)	Plating
Male	Female			
MP20W23F	MS20W23F	22-20	.34-.50	Gold Flash
MP20W23G5	MS20W23G5	22-20	.34-.50	Gold 5µ"
MP20W23G10	MS20W23G10	22-20	.34-.50	Gold 10µ"
MP20W23G15	MS20W23G15	22-20	.34-.50	Gold 15µ"
MP20W23G30	MS20W23G30	22-20	.34-.50	Gold 30µ"
MP24W23F	MS24W23F	26-24	.13-.25	Gold Flash
MP24W23G5	MS24W23G5	26-24	.13-.25	Gold 5µ"
MP24W23G10	MS24W23G10	26-24	.13-.25	Gold 10µ"
MP24W23G15	MS24W23G15	26-24	.13-.25	Gold 15µ"
MP24W23G30	MS24W23G30	26-24	.13-.25	Gold 30µ"
MP28W23F	MS28W23F	30-28	.05-.08	Gold Flash
MP28W23G5	MS28W23G5	30-28	.05-.08	Gold 5µ"
MP28W23G10	MS28W23G10	30-28	.05-.08	Gold 10µ"
MP28W23G15	MS28W23G15	30-28	.05-.08	Gold 15µ"
MP28W23G30	MS28W23G30	30-28	.05-.08	Gold 30µ"

Tools

Contact Extraction Tool, #20 (Ø 1.6) Contact

QXRT20

Hand Crimp Tool for Machined Contacts

MFX-3959

Pneumatic Crimp Tool for Machined Contact

MFX-3957

Shell Size: 18 **Number of Contacts: 32** **Contact Size: 20**
Sealing: IP67 / IP69k **Salt Spray: 500h**

Contacts (con't)

Stamped & Formed Contacts

Crimp Contacts, Stamped & Formed

Part Number		AWG	Wire Range (mm²)	Plating
Male	Female			
SP20W2F	SS20W2F	22-20	.34-.50	Gold Flash
SP20W2G5	SS20W2G5	22-20	.34-.50	Gold 5µ"
SP20W2G10	SS20W2G10	22-20	.34-.50	Gold 10µ"
SP20W2G15	SS20W2G15	22-20	.34-.50	Gold 15µ"
SP20W2G30	SS20W2G30	22-20	.34-.50	Gold 30µ"
SP24W2F	SS24W2F	26-24	.14-.25	Gold Flash
SP24W2G5	SS24W2G5	26-24	.14-.25	Gold 5µ"
SP24W2G10	SS24W2G10	26-24	.14-.25	Gold 10µ"
SP24W2G15	SS24W2G15	26-24	.14-.25	Gold 15µ"
SP24W2G30	SS24W2G30	26-24	.14-.25	Gold 30µ"
SP28W2F	SS28W2F	30-28	.05-.08	Gold Flash
SP28W2G5	SS28W2G5	30-28	.05-.08	Gold 5µ"
SP28W2G10	SS28W2G10	30-28	.05-.08	Gold 10µ"
SP28W2G15	SS28W2G15	30-28	.05-.08	Gold 15µ"
SP28W2G30	SS28W2G30	30-28	.05-.08	Gold 30µ"

Tools

Contact Extraction Tool, #20 (Ø 1.6) Contact

QXRT20

Hand Tool, Stamped & Formed Contact, Size 20, 20-28AWG

MFX-3958

Crimp Die for Stamped & Formed Contact

MFX-3957

Appendix

Glossary of Terms

American Wire Gauge (AWG)
System of numerical designations for wire sizes, based on specified ranges of cross-sectional areas. Starts with 4/0 (000) at the largest size, going to 3/0, 2/0, 1/0, 1, 2, and up to 40 and beyond for the smallest size. A step of one AWG number corresponds to a reduction of cross-sectional area of appr. 20 %.
Attenuation
A reduction of power. Occurs naturally when waves travel through lines, wave guides, or media such as air or water. Is produced additionally by imperfections in electrical or optical connections (attenuation in fibre optics), e. g. contact resistance, mismatch, etc.
Bulkhead connector
Connector designed to be inserted into a panel cutout from the rear of the panel, thus forming part of the barrier between two spaces. Back-mounted.
Clearance
The shortest distance in air between two conductive parts, see IEC 60664.
Climatic stability
General term describing the behavior of components under various climatic conditions, e. g. high and low temperatures, tropical climate, high humidity, moist heat, fungus, atmospheric conditions (industial atmosphere), reduced air pressure, etc. Climatic conditions for test purposes are explained in IEC 60068, DIN 46 040.
Connector
A component which terminates conductors for the purpose of providing connection and disconnection to a suitable mating component which shall not be engaged or disengaged when live. Depending on the fastening to a cabinet, panel, rack etc. or a cable, they are classified as fixed or free connectors. A connector comprises one or more contacts and a housing which may have a separate connector insert and a separate outer housing or shell.
Connector housing
The part of a connector into which the insert and the contacts are assembled. It may function as part of the locking mechanism.
Connector insert
An insulating element designed to support and position contacts in a connector housing. In connectors electromagnetic interference is prevented by shielding. Shielded connectors normally provide means to connect the screens of attached cables.

Connector life
The number of mating cycles prior to abrasion of the conductive contact surface and which does not result in a significant rise of the contact resistance. Tests according to test 9a of ICE 60512-5 / DIN EN 60512 Part 5.
Contact
The conductive element in a connector which mates with a corresponding element to provide an electrical path.
Contact resistance
The electrical resistance of a mated set of contacts under specified conditions. Tested according to tests 2a, 2b, 2c, of IEC 60 512 -2/ DIN EN 60 512-2.
Contact size
The designation used to differentiate one contact from another. It may be denoted by one of the following numbering systems:
Creepage distance
The shortest distance along the surface of the insulating material between two conductive parts. The longer the distance, the less the risk of arc damage or tracking. Minimum creepage distances are specified according to the rated voltage and the applicable pollution degree and Comperative Tracking Index.
Crimped connection
A solderless connection made by crimping. IEC 60352-2 / DIN IEC 60352 Part 2.
Derating curve
The method for determining derating is specified in IEC 60 512-3. Here the combination of ambient temperature (Tu) and the current (J) leading to the same maximum allowable temperature (Tb) at the hottest point of the connector are plotted.
DIN
Deutsches Institut für Normung. A German standards organization.
Electromagnetic interference (EMI)
General term describing the undesirable effects of the immission or emission of radio frequency fields.
Funnel entry (restricted entry C146 D series)
Flared or widened entrance to a conductor barrel permitting easier insertion of the conductor.
Insertion or withdrawal force
The force required to fully insert or withdraw a set of mated connectors without the effect of coupling, locking or similar devices. The insertion force is usually greater than the withdrawal force.

Appendix

Connector Glossary

Insulation grip
The area of a crimp contact that has been reshaped around the insulation of the conductor by compression during the crimping operation.
Insulation resistance
The resistance of the insulation between two conductive elements, in particular, the resistance between two contacts or between a contact and a metallic housing or shield. Tested according to test 3a of IEC 60512-2 / DIN IEC 60512 Part 2.
Intermateable
Two connectors are intermateable when they are capable of being connected electrically and mechanically but without regard to their performance and intermountability.
Locator
In a crimping tool the device used for positioning a crimp contact or terminal end.
Locking lever
A mechanical locking device operated by actuating a lever, designed to hold two mated connectors together. Typically the lever can only be fully locked if the two connectors are correctly mated.
Mating cycle
One mating cycle comprises one insertion and one withdrawal operation. Term used in the definition of connector life.
Material group
Classification of insulation materials according to their CTI values (CTI = Comperative Tracking Index)
Overvoltage category
A numeral defining a transient overvoltage condition. Overvoltage categories I, II, III and IV are used.
Connector with braking capacity (CBC)
A component which may be engaged or disengaged in normal use, when live or under load. Note: In the sense of this document the term - live- is used if contacts are under voltage not necessarily with a current flowing across the contacts. The term - load - is used if a current is flowing across the contacts.
Rated current
A current value assigned by the manufacturer which the connector or PSD can carry continuously (without interruption) and simultaneously through all its contacts wired with the largest conductor preferrably at an ambient temperature of 40 °C without the upper temperature being exceeded.

Shield, shielding
Shielding of internal or external electric fields by means of a plane with a uniform electric potential, formed by metal shells or metallic layers on the inside or outside of plastic shells. The shield is normally connected to the shielding braid of the cable and/or chassis ground.
Terminal block
An assembly of terminals in a housing or body of insulating material to facilitate interconnection between multiple conductors. Also called terminal strip or barrier blocks if the terminals are separated by an insulation barrier.
Wire range
The range of wire cross sections which is compatible with the dimensions the terminals of the contact (wire barrel). The wire range is expressed in mm2 or in AWG numbers.

Appendix

Part Number Index

A114017.....65,87,95
A114017-SR.....23,31,51,57,81,95,109,117,125,139,155,171,179
AT13-204-2005 17,43,81,87,103,147,163,187,195
MFX-3954..25,33,53,59,79,97,111,119,127,141,157,173,181
MFX-3957.....19,25,33,45,53,59,79,89,97,105,111,119,127,141,149,157,164,165,173,181,188,189,196,197
MFX-3958.....19,45,89,105,149,165,189,197
MFX-3959...18,24,32,44,52,58,78,88,96,104,118,126,140,148,156,164,172,180,188,196,110
MFX-3960.....18,24,32,44,52,58,78,88,96 104,118,126,140,148,156,172,180,110
MFX-3962.....65,89,97,133,141
MP10A23S.....39,71
MP14M23F.....24,32,52,58,77,96,110,118,126,140,156,172,180
MP14M23G5.....24,32,52,58,77,96,110,118,126,140,156,172,180
MP14M23G10.....24,32,52,58,77,96,110,118,126,140,156,172,180
MP14M23G15.....24,32,52,58,77,96,110,118,126,140,156,172,180
MP16M23F.....24,32,52,58,77,96,110,118,126,140,156,172,180
MP16M23G10.....24,32,52,58,77,96,110,118,126,140,156,172,180
MP16M23G30.....24,32,52,58,77,96,110,118,126,140,156,172,180
MP20M23F.....24,32,52,58,77,96,110,118,126,140,156,172,180
MP20M23G5.....24,32,52,58,77,96,110,118,126,140,156,172,180
MP20M23G10.....24,32,52,58,77,96,110,118,126,140,156,172,180
MP20M23G15.....24,32,52,58,77,96,110,118,126,140,156,172,180
MP20M23G30.....24,32,52,58,77,96,110,118,126,140,156,172,180
MP20W23F.....18,44,78,88,104,148,164,188,196
MP20W23G5.....18,44,78,88,104,148,164,188,196
MP20W23G10.....18,44,78,88,104,148,164,188,196
MP20W23G15.....18,44,78,88,104,148,164,188,196
MP20W23G30.....18,44,78,88,104,148,164,188,196
MP24M23F.....24,32,52,58,77,96,110,118,126,140,156,172,180
MP24M23G5.....24,32,52,58,77,96,110,118,126,140,156,172,180
MP24M23G10.....24,32,52,58,77,96,110,118,126,140,156,172,180
MP24M23G15.....24,32,52,58,77,96,110,118,126,140,156,172,180
MP24W23F.....18,44,78,88,104,148,164,188,196
MP24W23G5.....18,44,78,88,104,148,164,188,196
MP24W23G10.....18,44,78,88,104,148,164,188,196
MP24W23G15.....18,44,78,88,104,148,164,188,196
MP24W23G30.....18,44,78,88,104,148,164,188,196
MP28W23F.....18,44,78,88,104,148,164,188,196
MP28W23G5.....18,44,78,88,104,148,164,188,196
MP28W23G10.....18,44,78,88,104,148,164,188,196
MP28W23G15.....18,44,78,88,104,148,164,188,196
MP28W23G30.....18,44,78,88,104,148,164,188,196
MS10A23S.....39,71
MS14M23F.....24,32,52,58,77,96,110,118,126,140,156,172,180
MS14M23G5..24,32,52,58,77,96,110,118,126,140,156,172,180
MS14M23G10.....24,32,52,58,77,96,110,118,126,140,156,172,180
MS14M23G15.....24,32,52,58,77,96,110,118,126,140,156,172,180
MS14M23G30.....24,32,52,58,77,96,110,118,126,140,156,172,180
MS16M23F.....24,32,52,58,77,96,110,118,126,140,156,172,180
MS16M23G10.....24,32,52,58,77,96,110,118,126,140,156,172,180
MS16M23G15.....24,32,52,58,77,96,110,118,126,140,156,172,180
MS16M23G30.....24,32,52,58,77,96,110,118,126,140,156,172,180
MS20M23F.....24,32,52,58,77,96,110,118,126,140,156,172,180
MS20M23G5.....24,32,52,58,77,96,110,118,126,140,156,172,180
MS20M23G10.....24,32,52,58,77,96,110,118,126,140,156,172,180
MS20M23G15.....24,32,52,58,77,96,110,118,126,140,156,172,180
MS20M23G30.....24,32,52,58,77,96,110,118,126,140,156,172,180
MS20W23F.....18,44,78,88,104,148,164,188,196
MS20W23G5.....18,44,78,88,104,148,164,188,196
MS20W23G10.....18,44,78,88,104,148,164,188,196
MS20W23G15.....18,44,78,88,104,148,164,188,196
MS20W23G30.....18,44,78,88,104,148,164,188,196
MS24M23F.....24,32,52,58,77,96,110,118,126,140,156,172,180
MS24M23G5.....24,32,52,58,77,96,110,118,126,140,156,172,180

Appendix

Part Number Index

MS24M23G10.....24,32,52, 58,77,96,110, 118,126,140, 156,172,180
MS24M23G15.....24,32,52, 58,77,96,110, 118,126,140, 156,172,180
MS24M23G30.....24,32,52, 58,77,96,110, 118,126,140, 156,172,180
MS24W23F.....18,44,78, 88,104,148, 164,188,196
MS24W23G5.....18,44,78, 88,104,148, 164,188,196
MS24W23G10.....18,44,78, 88,104,148, 164,188,196
MS24W23G15.....18,44,78, 88,104,148, 164,188,196
MS24W23G30.....18,44,78, 88,104,148, 164,188,196
MS28W23F.....18,44,78, 88,104,148, 164,188,196
MS28W23G5.....18,44,78, 88,104,148, 164,188,196
MS28W23G10.....18,44,78, 88,104,148, 164,188,196
MS28W23G15.....18,44,78, 88,104,148, 164,188,196
MS28W23G30.....18,44,78, 88,104,148, 164,188,196
QXRT08.....39,71
QXRT08R.....39,71
QXRT12S.....65,89,97, 133,140,141
QXRT16.....24,25,32,33, 52,53,58,59, 79,96,97,110, 111,118,119,126, 127,141,156,157, 172,173,180,181
QXRT20.....18,19,44,45,78, 88,89,104,105, 148,149,164,165, 188,189,196,197
RTS6BS8N3P.....15
RTS6BS8N3S.....15
RTS6BS8N4P.....41
RTS6BS8N4S.....41
RTS6BS10N2P03.....73
RTS6BS10N2PHEC03.....73
RTS6BS10N2S03.....73
RTS6BS10N2SHEC03.....73
RTS6BS10N3P03.....21
RTS6BS10N3S03.....21
RTS6BS10N4P03.....47
RTS6BS10N4PHEC03.....47
RTS6BS10N4S03.....47
RTS6BS10N4SHEC03.....47
RTS6BS10N6P03.....99
RTS6BS10N6PHEC03.....99
RTS6BS10N6S03.....99
RTS6BS10N6SHEC03.....99
RTS6BS12N2P03.....83
RTS6BS12N2PHEC03.....83
RTS6BS12N2S03.....83
RTS6BS12N2SHEC03.....83
RTS6BS12N3P03.....27
RTS6BS12N3PHEC03.....27
RTS6BS12N3S03.....27
RTS6BS12N3SHEC03.....27
RTS6BS12N4P03.....55
RTS6BS12N4S03.....55
RTS6BS12N8P03.....113
RTS6BS12N8PHEC03.....113
RTS6BS12N8S03.....113
RTS6BS12N8SHEC03.....113
RTS6BS12N10P03.....143
RTS6BS12N10PHEC03.....143
RTS6BS12N10S03.....143
RTS6BS12N10SHEC03.....143
RTS6BS14N2P03.....91
RTS6BS14N2PHEC03.....91
RTS6BS14N2S03.....91
RTS6BS14N2SHEC03.....91
RTS6BS14N3P03.....35
RTS6BS14N3S03.....35
RTS6BS14N4P03.....61
RTS6BS14N4PHEC03.....61
RTS6BS14N4S03.....61
RTS6BS14N4SHEC03.....61
RTS6BS14N7P03.....107
RTS6BS14N7S03.....107
RTS6BS14N8P03.....121
RTS6BS14N8PHEC03.....121
RTS6BS14N8S03.....121
RTS6BS14N8SHEC03.....121
RTS6BS14N12P03.....151
RTS6BS14N12P03.....154
RTS6BS14N12PHEC03.....151
RTS6BS14N12PHEC03.....154
RTS6BS14N12S03.....151
RTS6BS14N12S03.....154
RTS6BS14N12SHEC03.....151
RTS6BS14N12SHEC03.....154
RTS6BS14N19P03.....159
RTS6BS14N19PHEC03.....159
RTS6BS14N19S03.....159
RTS6BS14N19SHEC03.....159
RTS6BS16N4P03.....67
RTS6BS16N4PHEC03.....67
RTS6BS16N4S03.....67
RTS6BS16N09P03.....135
RTS6BS16N09PHEC03.....135
RTS6BS16N09S03.....135
RTS6BS16N09SHEC03.....135
RTS6BS16N14SHEC03.....67
RTS6BS16N19P03.....167
RTS6BS16N19PHEC03.....167
RTS6BS16N19S03.....167
RTS6BS16N19SHEC03.....167
RTS6BS16N26P03.....183
RTS6BS16N26PHEC03.....183
RTS6BS16N26S03.....183
RTS6BS16N26SHEC03.....183
RTS6BS18N4P03.....129
RTS6BS18N4PHEC03.....129
RTS6BS18N4S03.....129
RTS6BS18N4SHEC03.....129
RTS6BS18N23P03.....175
RTS6BS18N23PHEC03.....175
RTS6BS18N23S03.....175
RTS6BS18N23SHEC03.....175
RTS6BS18N32P03.....191
RTS6BS18N32PHEC03.....191
RTS6BS18N32S03.....191
RTS6BS18N32SHEC03.....191
RTS8CCRG.....17,43
RTS8CCRR.....17,43
RTS8CCRY.....17,43
RTS08N3P.....15
RTS08N3S.....15
RTS08N4P.....41
RTS08N4S.....41
RTS10CCRG.....23,51,81,103
RTS10CCRR.....23,51,81,103
RTS10CCRY.....23,51,81,103
RTS010N2P03.....73
RTS010N2PHEC03.....73
RTS010N2S03.....73
RTS010N2SHEC03.....73
RTS010N3P03.....21
RTS010N3S03.....21
RTS010N4P03.....47
RTS010N4PHEC03.....47
RTS010N4S03.....47
RTS010N4SHEC03.....47
RTS010N6P03.....99
RTS010N6PHEC03.....99
RTS010N6S03.....99
RTS010N6SHEC03.....99
RTS12CCRG.....31,57, 87,117,147
RTS12CCRR.....31,57, 87,117,147
RTS12CCRY.....31,57, 87,117,147
RTS012DCG.....31,57, 87,117,147
RTS012N2P03.....83
RTS012N2PHEC03.....83
RTS012N2S03.....83
RTS012N2SHEC03.....83
RTS012N3P03.....27
RTS012N3PHEC03.....27
RTS012N3S03.....27
RTS012N3SHEC03.....27
RTS012N4P03.....55
RTS012N4S03.....55
RTS012N8P03.....113
RTS012N8PHEC03.....113
RTS012N8S03.....113
RTS012N8SHEC03.....113
RTS012N10P03.....143
RTS012N10PHEC03.....143
RTS012N10S03.....143
RTS012N10SHEC03.....143
RTS14CCRG.....38,65,95, 109,125,155,163
RTS14CCRR.....38,65,95, 109,125,155,163
RTS14CCRY.....38,65,95, 109,125,155,163
RTS014DCG.....38,65,95, 109,125,155,163
RTS014N3P03.....35
RTS014N3S03.....35
RTS014N4P03.....61
RTS014N4PHEC03.....61
RTS014N4S03.....61
RTS014N4SHEC03.....61
RTS014N7P03.....107
RTS014N7S03.....107

Appendix

Part Number Index

RTS014N8P03 121
RTS014N8PHEC03 121
RTS014N8S03 121
RTS014N8SHEC03 121
RTS014N19P03 159
RTS014N19PHEC03 159
RTS014N19S03 159
RTS014N19SHEC03 159
RTS16CCRG 71,139, 171,187
RTS16CCRR 71,139, 171,187
RTS16CCRY 71,139, 171,187
RTS016DCG 71,139, 171,187
RTS016N4P03 67
RTS016N4PHEC03 67
RTS016N4S03 67
RTS016N4SHEC03 67
RTS016N09P03 135
RTS016N09PHEC03 135
RTS016N09S03 135
RTS016N09SHEC03 135
RTS016N19P03 167
RTS016N19PHEC03 167
RTS016N19S03 167
RTS016N19SHEC03 167
RTS016N26P03 183
RTS016N26PHEC03 183
RTS016N26S03 183
RTS016N26SHEC03 183
RTS18CCRG 133,179,195
RTS18CCRR 133,179,195
RTS18CCRY 133,179,195
RTS018DCG 133,179,195
RTS018N8P03 129
RTS018N8PHEC03 129
RTS018N8S03 129
RTS018N8SHEC03 129
RTS018N23P03 175
RTS018N23PHEC03 175
RTS018N23S03 175
RTS018N23SHEC03 175
RTS018N32P03 191
RTS018N32PHEC03 191
RTS018N32S03 191
RTS018N32SHEC03 191
RTS78N3P 15
RTS78N3S 15
RTS78N4P 41
RTS78N4S 41
RTS0114N2P03 91
RTS0114N2PHEC03 91
RTS0114N2S03 91
RTS0114N2SHEC03 91
RTS610NDCG 23,51, 81,103
RTS612NDCG 31,57, 87,117,147
RTS614NDCG 38,65,95, 109,125,155,163
RTS616NDCG 71,139, 171,187
RTS618NDCG 133,179,195
RTS710N2P03 73
RTS710N2PHEC03 73
RTS710N2S03 73
RTS710N3P03 21
RTS710N3S03 21
RTS710N4P03 47
RTS710N4PHEC03 47
RTS710N4S03 47
RTS710N6P03 99
RTS710N6PHEC03 99
RTS710N6S03 99
RTS712N2P03 83
RTS712N2PHEC03 83
RTS712N2S03 83
RTS712N3P03 27
RTS712N3PHEC03 27
RTS712N3S03 27
RTS712N4P03 55
RTS712N4S03 55
RTS712N8P03 113
RTS712N8PHEC03 113
RTS712N8S03 113
RTS712N10P03 143
RTS712N10PHEC03 143
RTS712N10S03 143
RTS714N2P03 91
RTS714N2PHEC03 91
RTS714N2S03 91
RTS714N3P03 35
RTS714N3S03 35
RTS714N4P03 61
RTS714N4PHEC03 61
RTS714N4S03 61
RTS714N7P03 107
RTS714N7S03 107
RTS714N8P03 121
RTS714N8PHEC03 121
RTS714N8S03 121
RTS714N12P03 151
RTS714N12P03 152
RTS714N12PHEC03 151
RTS714N12PHEC03 152
RTS714N12S03 151
RTS714N12S03 152
RTS714N19P03 159
RTS714N19PHEC03 159
RTS714N19S03 159
RTS716N4P03 67
RTS716N4PHEC03 67
RTS716N4S03 67
RTS716N09P03 135
RTS716N09PHEC03 135
RTS716N09S03 135
RTS716N09SHEC03 135
RTS716N19P03 167
RTS716N19PHE03 167
RTS716N19S03 167
RTS716N26P03 183
RTS716N26PHEC03 183
RTS716N26S03 183
RTS718N8P03 129
RTS718N8PHEC03 129
RTS718N8S03 129
RTS718N23P03 175
RTS718N23PHEC03 175
RTS718N23S03 175
RTS718N32P03 191
RTS718N32PHEC03 191
RTS718N32S03 191
SP12A1T 65,89, 97,133,141
SP14M2F 25,33,53,59, 79,97,111, 119,127,141,1 57,173,181
SP14M2G5 25,33,53, 59,79,97,111, 119,127,141, 157,173,181
SP14M2G10 25,33,53, 59,79,97,111, 119,127,141, 157,173,181
SP14M2G15 25,33,53, 59,79,97,111, 119,127,141, 157,173,181
SP14M2G30 25,33,53, 59,79,97,111, 119,127,141, 157,173,181
SP16M2F 25,33,53, 59,79,97,111, 119,127,141, 157,173,181
SP16M2G5 25,33,53, 59,79,97,111, 119,127,141, 157,173,181
SP16M2G15 25,33,53, 59,79,97,111, 119,127,141, 157,173,181
SP16M2G30 25,33,53, 59,79,97,111, 119,127,141, 157,173,181
SP20M2F 25,33,53, 59,79,97,111, 119,127,141, 157,173,181
SP20M2G5 25,33,53, 59,79,97,111, 119,127,141, 157,173,181
SP20M2G10 25,33,53, 59,79,97,111, 119,127,141, 157,173,181
SP20M2G15 25,33,53, 59,79,97,111, 119,127,141, 157,173,181
SP20M2G30 25,33,53, 59,79,97,111, 119,127,141, 157,173,181
SP20W2F 19,45,80, 89,105,149, 165,189,197
SP20W2G5 19,45,80, 89,105,149, 165,189,197
SP20W2G10 19,45,80, 89,105,149, 165,189,197
SP20W2G15 19,45,80, 89,105,149, 165,189,197
SP20W2G30 19,45,80, 89,105,149, 165,189,197
SP24M2F 25,33,53,59, 79,97,111, 119,127,141, 157,173,181
SP24M2G5 25,33,53,59, 79,97,111, 119,127,141, 157,173,181

Appendix

Part Number Index

SP24M2G10....25,33,53,59, 79,97,111, 119,127,141, 157,173,181
SP24M2G15....25,33,53,59, 79,97,111, 119,127,141, 157,173,181
SP24M2G30....25,33,53,59, 79,97,111, 119,127,141, 157,173,181
SP24W2F.....19,45,80, 89,105,149, 165,189,197
SP24W2G5.....19,45,80, 89,105,149, 165,189,197
SP24W2G10.....19,45,80, 89,105,149, 165,189,197
SP24W2G15.....19,45,80, 89,105,149, 165,189,197
SP24W2G30.....19,45,80, 89,105,149, 165,189,197
SP28W2F.....19,45,80, 89,105,149, 165,189,197
SP28W2G5.....19,45,80, 89,105,149, 165,189,197
SP28W2G10.....19,45,80, 89,105,149, 165,189,197
SP28W2G15.....19,45,80, 89,105,149, 165,189,197
SP28W2G30.....19,45,80, 89,105,149, 165,189,197
SS12A1T...65,89,97,133,141
SS14M2F.....25,33,53, 59,79,97,111, 119,127,141, 157,173,181
SS14M2G5.....25,33,53, 59,79,97,111, 119,127,141, 157,173,181
SS14M2G10.....25,33,53, 59,79,97,111, 119,127,141, 157,173,181
SS14M2G30.....25,33,53, 59,79,97,111, 119,127,141, 157,173,181
SS16M2F.....25,33,53, 59,79,97,111, 119,127,141, 157,173,181
SS16M2G5.....25,33,53, 59,79,97,111, 119,127,141, 157,173,181
SS16M2G10.....25,33,53, 59,79,97,111, 119,127,141, 157,173,181
SS16M2G15.....25,33,53, 59,79,97,111, 119,127,141, 157,173,181
SS16M2G30.....25,33,53, 59,79,97,111, 119,127,141, 157,173,181
SS20M2F.....25,33,53, 59,79,97,111, 119,127,141, 157,173,181
SS20M2G5.....25,33,53, 59,79,97,111, 119,127,141, 157,173,181
SS20M2G10.....25,33,53, 59,79,97,111, 119,127,141, 157,173,181
SS20M2G15.....25,33,53, 59,79,97,111, 119,127,141, 157,173,181
SS20M1G30.....25,33,53, 59,79,97,111, 119,127,141, 157,173,181
SS20W2F.....19,45,80, 89,105,149, 165,189,197
SS20W2G5.....19,45,80, 89,105,149, 165,189,197
SS20W2G10.....19,45,80, 89,105,149, 165,189,197
SS20W2G15.....19,45,80, 89,105,149, 165,189,197
SS20W2G30.....19,45,80, 89,105,149, 165,189,197
SS24M2F.....25,33,53,59, 79,97,111, 119,127,141, 157,173,181
SS24M2G5.....25,33,53,59, 79,97,111, 119,127,141, 157,173,181
SS24M2G10....25,33,53,59, 79,97,111, 119,127,141, 157,173,181
SS24M2G15....25,33,53,59, 79,97,111, 119,127,141, 157,173,181
SS24M2G30....25,33,53,59, 79,97,111, 119,127,141, 157,173,181
SS24W2F.....19,45,80, 89,105,149, 165,189,197
SS24W2G5.....19,45,80, 89,105,149, 165,189,197
SS24W2G10.....19,45,80, 89,105,149, 165,189,197
SS24W2G15.....19,45,80, 89,105,149, 165,189,197
SS24W2G30.....19,45,80, 89,105,149, 165,189,197
SS28W2F.....19,45,80, 89,105,149, 165,189,197
SS28W2G5.....19,45,80, 89,105,149, 165,189,197
SS28W2G10.....19,45,80, 89,105,149, 165,189,197
SS28W2G15.....19,45,80, 89,105,149, 165,189,197
SS28W2G30.....19,45,80, 89,105,149, 165,189,197

INDUSTRIAL@AMPHENOL TRUSTED GLOBALLY

Amphenol Sine Systems, USA
Amphenol Tuchel Industrial, GmbH
Amphenol Audio, USA

USA
Amphenol Sine Systems
44724 Morley Drive
Clinton Township, MI 48036
Toll-Free: 1-800-394-7732
Fax: 1-586-465-1216
Email: csr@amphenol-sine.com
www.amphenol-sine.com

Germany
Amphenol Tuchel GmbH
August-Haeusser-Strasse 10
Heilbronn, Germany 74080
Phone: +49(0)-7131-929-0
Fax: +49(0)-7131-929-486
Email: info@amphenol.de
www.amphenol.de

China
Amphenol Sine Systems
Building 21, 1st Liao Keng Industrial Zone,
Shi Yan Street, Bao An District
Shenzhen, China 518180
Tel: +86-755-8173-8000 ext. 8098
Fax: +86-755-8173-8180
www.amphenol-sine.com.cn

USA
Amphenol Corporation
Corporate Headquarters
358 Hall Ave
Wallingford Ct 06492
Phone: (877) 267-4366
www.amphenol.com

Mexico
Prolongacion Reforma 61-6 B2
Col. Paseo de las Lomas
C.P. 01330 Mexico DF, Mexico
Phone: 52-55-5258-9984
Fax: 52-55-5081-6890
Email: info@amphenolmexico.com
www.amphenolmexico.com

Argentina
Amphenol ARGENTINA
Avenida Callao 930
2nd floor Office B Plaza
C1023AAP Buenos Aires, Argentina
Phone: 54-11-4815-6886
Fax: 54-11-4814-5779
Email: info@amphenol.com.ar
amphenol.com.ar

Brazil
Amphenol do Brasil Ltda
Rua Diogo Moreira, 132
20 Andar, Rooms 2001-2-3
CEP 05423-101
Sao Paulo- SP, Brazil
Phone: 55-11-3815-1003
Fax: 55-11-3815-1629
www.amphenol.com.br

France
Amphenol SOCAPEX
948, Promenade de l'Arve - BP 29
74311 Thyez CEDEX, France
Phone: 33(0)4-50-89-28-40
Fax: 33(0)4-50-96-29-75
www.amphenol-socapex.com

United Kingdom
Amphenol LIMITED
Thanet Way, Whitstable
Kent CT5 3JF, United Kingdom
Phone: 44-1-227-773200
Fax: 44-1-227-276571
www.amphenol.co.uk

Australia
Amphenol AUSTRALIA PTY LTD
22 Industry Boulevard
Carrum Downs VIC 3201 Australia
Phone: +61-3-8796-8888
Fax: +61-3-8796-8801
www. amphenol.com.au

Turkey
Amphenol International Ltd Turkey
Sun Plaza Kat. 15
Maslak Mah. Bilim Sok. No. 5
34398 Sisli / Istanbul – Turkey
Tel: + 90 212 367.92.20
Fax: + 90 212 367.92.21
www.amphenol.com.tr

South Africa
Amphenol International Ltd
South Africa
30 Impala Road
2196 Sandton, Chislehurston
South Africa
Phone: 27-11-783-9517
Fax: 27-11-783-9519
Email: sales@amphenolafrica.com
www.amphenol.com.za

India
Amphenol INTERCONNECT INDIA PVT LTD
105 Bhosari Industrial Area
Pune 411 026, India
Phone: +91 20 67360304
Fax: +91 20 67360321
www.amphenol-in.com

Korea
Amphenol DAESHIN
558. Songnae-2 Dong. SoSa-Gu
Bucheon City, Gyeonggi-do,
Korea 422-818
Phone: 81-32-610-3800
Fax: 81-32-673-2507
Email: info@amphenol.co.kr
www. amphenol.co.kr

Japan
Amphenol JAPAN
471-1, Deba, Ritto-city
shiga 520-3041, Japan
Phone: 81-77-553-8501
Fax: 81-77-551-2200
www.amphenol.co.jp

Russia
Amphenol RUSSIA
8 Yaroslavskaja Street
129164 Moscow, Russia
Phone: 7495-937-6341
Fax: 7495-937-6319
www.amphenol.ru

Catalog Number: CAT-ECOMATE-AQ Published SEPT 2019